HAN'S MOTOR

Torque Motor | Selection Manual

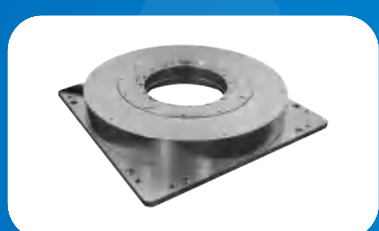

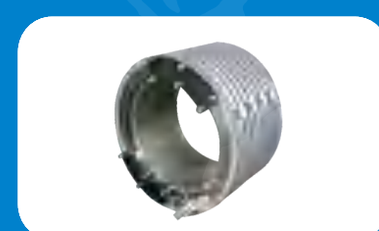

Shenzhen Han's motor S&T Co.,Ltd

(CN)-22.06

Company Introduction

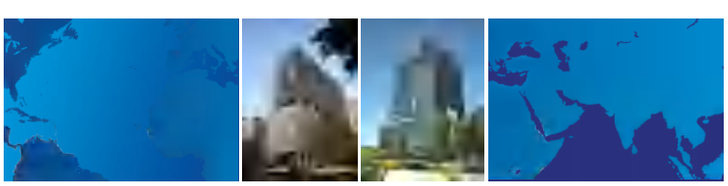

Shenzhen Han's Motor S&T Co.,Ltd was established in 2005, It’s a subsidiary of Han’s Laser (Stock Code: 002008), Han’s laser is a public company which has now became the flagship of Chinese national laser industry and the world's famous laser equipment manufacturer.

Han's Motor focus on linear motors, torque motors, motor modules, motion stages, AC servo systems, variable frequency drives,and so on. Which has specialized in direct drive system in the domestic research, development, promotion, application for 16 years.

Han's Motor has also shared the global marketing system of Han's Group. As of today, Han’s Laser market value reaches more than 6 Billion USD.

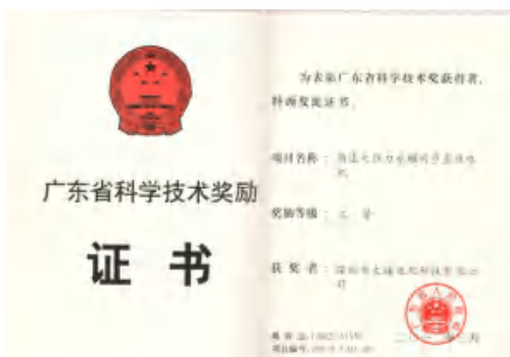

Honor

Shenzhen Han's Motor S&T Co.,Ltd

Contents

Torque motor

F/B Series Torque Motor ---------- 1~19

F/B Series Torque Motor Index ---------- 2

F/B Series Torque MotorSelection Rules and Adapter Cables ---------- 3~4

With frame inner rotor FI Series ---------- 5~8

With frame outer rotor FE Series ---------- 9~12

Frameless inner rotor BI Series ---------- 13~19

HANS series Torque Motor ---------- 20~38

HANS Series Torque Motor Index ---------- 21

HANS Series Torque selection specification and power transfer cable ---------- 22~24

HANS Torque Motor B Series ---------- 25~26

HANS Torque Motor C Series ---------- 27~28

HANS Torque Motor D Series ---------- 29~30

HANS Torque Motor E Series ---------- 31~32

HANS Torque Motor F Series ---------- 33~34

HANS Torque Motor G Series ---------- 35~36

HANS Torque Motor H Series ---------- 37~38

Accessory

Hans Motor Torque motor requirements table ---- 39

HAN'S MOTOR

F/B Series Torque Motor

- Direct drive, high dynamic response
- Inner rotor/outer rotor structure
- High speed/low speed winding design
- F Series integrated precision grating/magnetic grating, bearing
- 5500Nm B series divided into stator, rotor, maximum specification peak thrust 5500Nm
- Customizable development

Torque motor with peak torque of 5500Nm is applied to "High-grade CNC Machine Tools and Basic Manufacturing Equipment" science and technology major special project "Vertical Milling Car Compound Machining Center"

HAN'S MOTOR

Frame Torque Motor FI/FE Series Selection

Model	Center Hole(mm)	Outer Diameter (mm)	Height (mm)	Repeatability Accuracy (Arc sec)	Spec.	Continuous torque（Nm）	Peak torque（Nm）
FI4	40	360	145	±2	FI4-100	110	330
			170		FI4-150	160	500
			195		FI4-200	200	600
FI5	220	400	75	±2	FI5-020	20	60
FID	35	140	47	±2	FID-002	1.5	5
	190	406	65	±2	FID-040	42	58
FE2	0	150	102	±2	FE2-010	10	30
			136	±2	FE2-020	20	60
FE3	10	65	22	±2	FE3-0D06	0.062	0.46
	36	120	25	±2	FE3-0D40	0.4	1.2
	110	270	67	±2	FE3-0D50	3.5	10

Frameless Inner Rotor Torque Motor BI Series Selection

Model	Center Hole(mm)	Outer Diameter	Height（mm）	Spec.	Continuous torque（Nm）	Peak torque（Nm）
BI4 (water cooling)	140	230	90	BI4-010	101	170
			110	BI4-015	141	235
			140	BI4-020	209	356
			190	BI4-030	315	536
BI5 (water cooling)	265	385	130	BI4-010	546	1000
			160	BI4-015	844	1453
			210	BI4-020	1226	2157
			235	BI4-030	1365	2440
BI6 (water cooling)	200	310	110	BI6-030	299	543
			140	BI6-040	415	756
			234	BI6-080	757	1376
BI7 (water cooling)	60	160	90	BI7-003	30	70
			110	BI7-005	50	95
			190	BI7-010	105	204
BI10 (natural cooling)	120	208	82	BI10-003	25	75
			122	BI10-005	50	150
			145	BI10-007	69	207
BI15 (natural cooling)	74	166	52	BI15-002	15	45
Bi16 (water cooling)	115	180	90	BI16-003	30	90

F/B Series Torque Motor Selection Rules

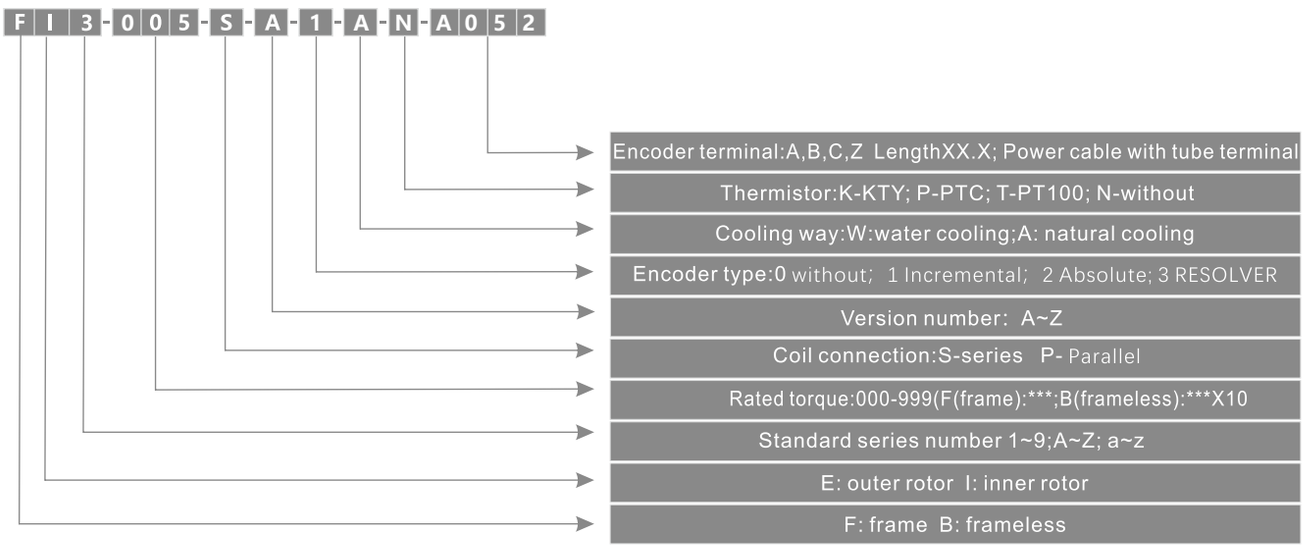

Selection guide:

FI3-005-S-D-1-A-N-A030: represents frame inner rotor 3 series motor, continuous torque 5Nm, series, D version, incremental encoder configuration, natural cooling, no thermistor, encoder with Servotronix driver 26pin terminal, 3 meters cable, and according to the motor model and extension cord model to determine the specifications and models:

FI3-005-S-D-1-A-N-A030 = FI3-005-S-D-1(motor) + A1601-EC-01-01A(power extension cord) + A1314-EC-01—04A(encoder extension cord), selection finished.

Remark:1. terminal type represents the terminal type of encoder, A: Servotronix driver 26pin terminal; B: HANS driver terminal; C: Others Z: Without (Select the encoder extension cord according to the driver and signal type).
2. B series motor thermistor can be selected;
3. F series motor without thermistor.

Male head

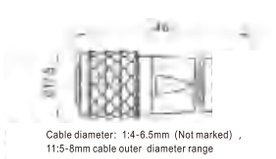

Male model：SF1210-P4-II Weipu

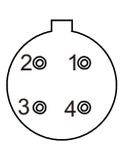

Diagram of aviation plug pin

Female head

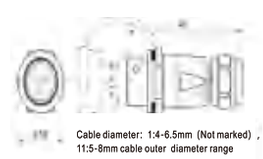

Female model：SF1211-S4-II Weipu

Pin definition	
1	U
2	V
3	W
4	PE

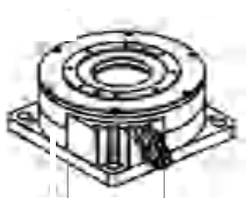

Motor out of line end

F/B series torque motor

remark:the standard length of the out of line is 0.2m, which can be customized according to customer requirements

HAN'S MOTOR

F Series Torque Motor Transfer Cord Rules

Model	Length	Definition	Remark
A1314-EC-01-01A	2m	Power extension cord	Common used
A1601-EC-01-01A	3m	Power extension cord	
A1601-EC-01-03A	5m	Power extension cord	
A1314-EC-01-02A	2m	Encoder extension cord	With HANS driver terminal (1VPP)
A1803-EC-01-02A	3m	Encoder extension cord	With HANS driver terminal (1VPP)
A1314-EC-01-04A	3m	Encoder extension cord	With Servotronix driver 26pin terminal (1VPP)
A1601-EC-01-02A	3m	FIA series transfer cord (with HANS driver terminal-Endat2.2)	FIA series motor exclusive use
A1601-EC-01-04A	5m	FIA series transfer cord (with HANS driver terminal-Endat2.2)	
A1601-EC-01-05A	3m	FIA series transfer cord (with Servotronix driver 26 pin terminal-Endat2.2)	

Diagram of Power Extension Cord

PIN	Describe	Line color
1	U	black1
2	V	black2
3	W	black3
4	ground wire	yellow-green
shell	shielded wire	

Pin definition of aviation plug

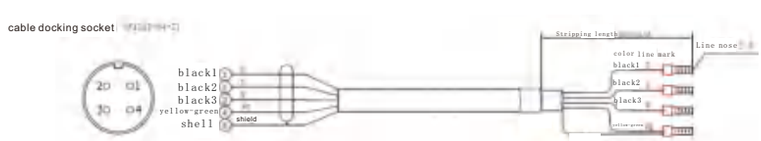

Cable	Describe
black1	U
black2	V
black3	W
yellow-green shielded wire	PE

Definition of cable outlet

Diagram of Power Extension Cord

PIN	Describe	line color
1	GND	brown
2	DATA+	pink
3		
4	CLK+	yellow
5	5V	white
6	DATA-	gray
7		
8	CLK-	green
9		
shell	shield	shielded wire

Definition of DB-9 female head wiring

PIN	Describe	line color
1	DATA+	pink
2	CLK+	yellow
11	+5V	white
14	DATA-	gray
15	CLK-	green
24	GND	brown
26	shield	shielded wire

Definition of 26PIN connector wiring

Remark:Power extension cord and encoder extension cord can be customized according to customer requirements.

HAN'S MOTOR

FI4 series

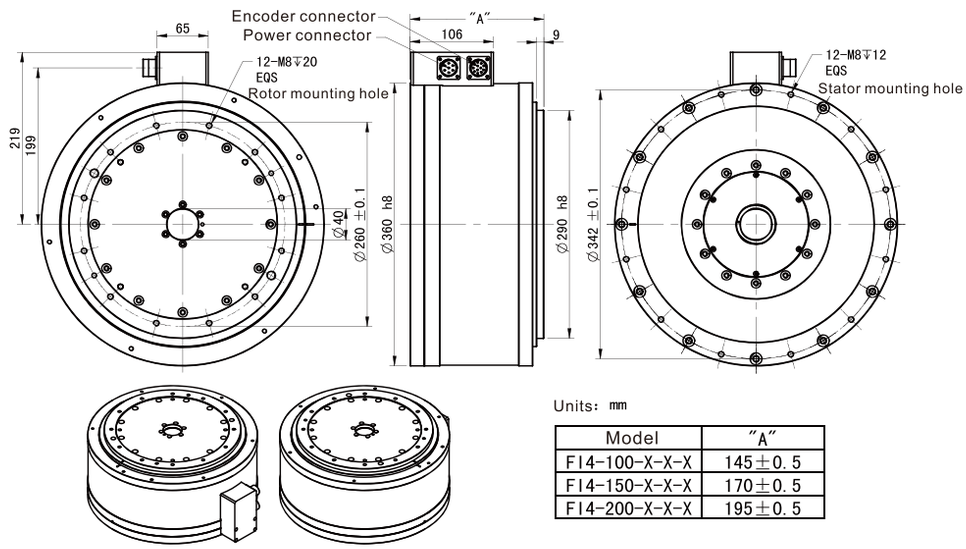

Units: mm

Model	"A"
FI4-100-X-X-X	145±0.5
FI4-150-X-X-X	170±0.5
FI4-200-X-X-X	195±0.5

Motor Model No.: FI4-xxx-S-A-2			100-S-A-2	150-S-A-2	200-S-A-2
Performance Parameters	**Symbol**	**Unit**			
Continuous torque (Tmax)	Tc	Nm	110	160	200
Peak torque	Tp	Nm	330	500	600
Vmax,Tc@Vbus=310Vdc	Nmax,Tc	Rpm	90	60	100
Vmax,Tp@Vbus=310Vdc	Nmax,Tp	Rpm	60	30	65
Vmax,0@Vbus=310Vdc	Nmax,0	Rpm	100	75	115
Encoder (absolute Endat2.2 signal)		P/rev	19bits	19bits	19bits
Repeat Accuracy		arc sec	±2	±2	±2
Positioning Accuracy		arc sec	±30	±30	±30
Continuous current (Tmax)	Ic	Arms	3.5	3.5	6.5
Peak Current (1s)	Ip	Arms	10.0	10.0	21.0
Constant torque (25℃,±5%)	Kt	Nm/Arms	34.7	46.4	30.6
Potential constant (25℃,±5%)	Ke	Vrms/rad/s	11.5	15.5	10.2
Resistance (25℃,±5%)	R	Ω(p-p)	7.1	8.8	3.5
Inductance (25℃,±10%)	L	mH(p-p)	26.5	36.0	8.8
Number of pole-pairs	p		33	33	33
Max allowable coil temperature	Tmax	℃	120	120	120
Motor mass		Kg	70.0	80.0	90.0
Rotor mass	Mr	Kg	22.5	24.8	26.9
Moment of inertia of rotor	Jm	Kg*m2	0.3250	0.3646	0.4042
Axial runout		mm	0.050	0.050	0.050
Radial runout		mm	0.050	0.050	0.050
Cable length (Can be extended/optional)	L	M	3.0	3.0	10.0
Cable Minimum bending radius	R	mm	65.0	65.0	65.0

Remarks: Electrical parameters and encoder types can be adjusted appropriately according to customer requirements, please contact our company for details

HAN'S MOTOR

FI5 series

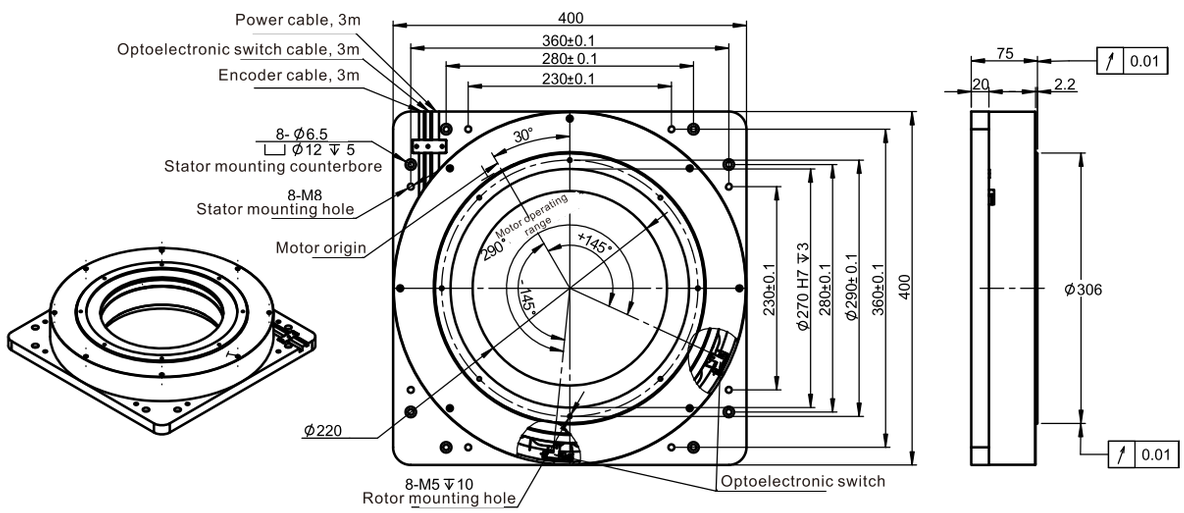

Motor Model No.: FI5-xxx-S-B-1			020-S-B-1
Performance Parameters	**Symbol**	**Unit**	
Continuous torque (Tmax)	Tc	Nm	20
Peak torque	Tp	Nm	60
Vmax,Tc@Vbus=310Vdc	Nmax,Tc	Rpm	300
Vmax,Tp@Vbus=310Vdc	Nmax,TP	Rpm	180
Vmax,0@Vbus=310Vdc	Nmax,0	Rpm	360
Encoder (incremental 1Vpp sinusoidal signal)		Line count/270°	55029
Repeat Accuracy		arc sec	±2
Positioning Accuracy		arc sec	±25
Continuous current (Tmax)	Ic	Arms	2.2
Peak Current (1s)	Ip	Arms	6.6
Constant torque (25℃,±5%)	Kt	Nm/Arms	9.0
Potential constant (25℃,±5%)	Ke	Vrms/rad/s	3.0
Resistance (25℃,±5%)	R	Ω(p-p)	14.0
Inductance (25℃,±10%)	L	mH(p-p)	4.2
Number of pole-pairs	p		16
Max allowable coil temperature	Tmax	℃	120
Motor mass		Kg	13.5
Rotor mass	Mr	Kg	3.0
Moment of inertia of rotor	Jm	Kg*m2	0.0720
Axial runout		mm	0.010
Radial runout		mm	0.010
Cable length (Can be extended/optional)	L	M	3.2
Cable Minimum bending radius	R	mm	37.5

Remarks: Electrical parameters and encoder types can be adjusted appropriately according to customer requirements, please contact our company for details

FID series

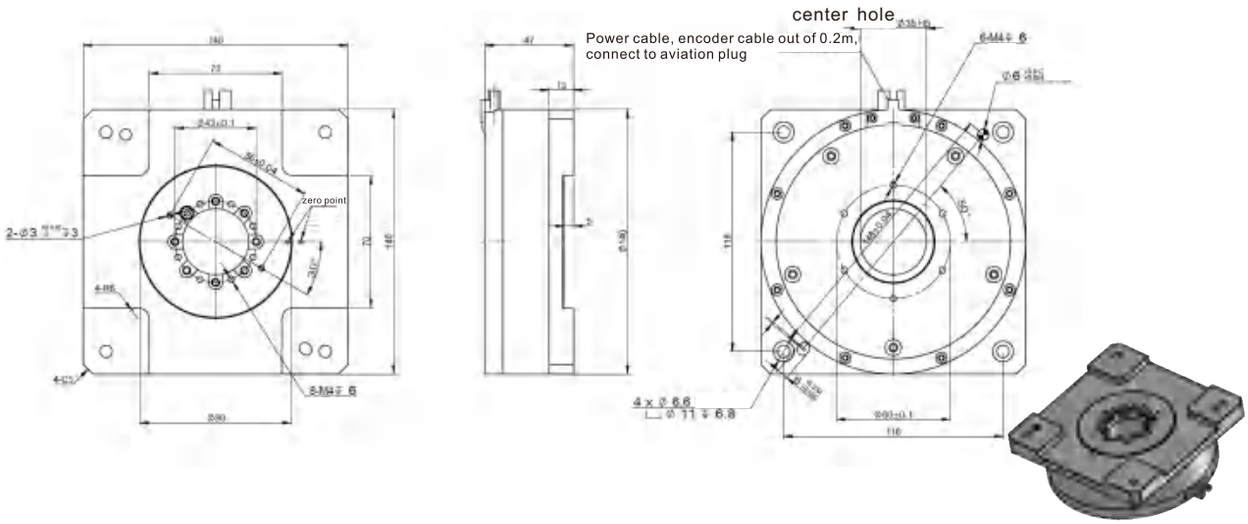

Motor Model No.: FID-xxx-x-A-1			002-S-A-1	040-P-A-1
Performance Parameters	**Symbol**	**Unit**		
Continuous torque (Tmax)	Vdc	V	48.0	200
Peak torque	Tc	Nm	1.5	42
Vmax,Tc@Vbus=310Vdc	Tp	Nm	5.0	58
Vmax,Tp@Vbus=310Vdc	Nmax	Rpm	300.0	120
Vmax,0@Vbus=310Vdc	Nmax	Rpm	120.0	110
Encoder (incremental 1Vpp sinusoidal signal)	Nmax	Rpm	380.0	130
Repeat Accuracy		Lines/rev	5870	47200
Positioning Accuracy		arc sec	±1	±1.5
Continuous current (Tmax)		arc sec	±30	±30
Peak Current (1s)	Ic	Arms	1.5	2.5
Constant torque (25℃,±5%)	Ip	Arms	4.7	3.5
Potential constant (25℃,±5%)	Kt	Nm/Arms	1.0	16.8
Resistance (25℃,±5%)	Ke	Vrms/rad/s	0.3	5.6
Inductance (25℃,±10%)	R	Ω(p-p)	4.6	5.0
Number of pole-pairs	L	mH(p-p)	3.5	22.0
Max allowable coil temperature	p		8	33
Motor mass	Tmax	℃	120	120
Rotor mass		Kg	3.5	23.0
Moment of inertia of rotor	Mr	Kg	0.70	6.70
Axial runout	Jm	Kg*m2	0.0011	0.1430
Radial runout		mm	0.005	0.010
Cable length (Can be extended/optional)		mm	0.005	0.010
Cable Minimum bending radius	R	mm	37.5	37.5

Remarks: Electrical parameters and encoder types can be adjusted appropriately according to customer requirements, please contact our company for details

HAN'S MOTOR

FE2 series

Motor Model No.: FE2-xxx-S-x-2			010-S-C-2	020-S-A-2
Performance Parameters	**Symbol**	**Unit**		
Continuous torque (Tmax)	Tc	Nm	10	20
Peak torque	Tp	Nm	30	60
Vmax,Tc@Vbus=310Vdc	Nmax,Tc	Rpm	500	560
Vmax,Tp@Vbus=310Vdc	Nmax,Tp	Rpm	390	480
Vmax,0@Vbus=310Vdc	Nmax,0	Rpm	550	600
Encoder (absolute Endat2.1 signal)		P/rev	Analog 2048 lines, absolute number 13bits	Analog 2048 lines, absolute number 13bits
Repeat Accuracy		arc sec	±2	±2
Positioning Accuracy		arc sec	±26	±26
Continuous current (Tmax)	Ic	Arms	1.6	3.6
Peak Current (1s)	Ip	Arms	7.3	16.0
Constant torque (25℃,±5%)	Kt	Nm/Arms	6.2	5.6
Potential constant (25℃,±5%)	Ke	Vrms/rad/s	2.1	1.9
Resistance (25℃,±5%)	R	Ω(p-p)	11.2	3.6
Inductance (25℃,±10%)	L	mH(p-p)	15.5	12.0
Number of pole-pairs	p		8	8
Max allowable coil temperature	Tmax	℃	120	120
Motor mass		Kg	11	15
Rotor mass	Mr	Kg	4.75	5.62
Moment of inertia of rotor	Jm	Kg*m2	0.0187	0.0230
Axial runout		mm	0.040	0.040
Radial runout		mm	0.040	0.040
Cable length (Can be extended/optional)	L	M	1.5	1.5
Cable Minimum bending radius	R	mm	37.5	37.5

Remarks: Electrical parameters and encoder types can be adjusted appropriately according to customer requirements, please contact our company for details

FID series

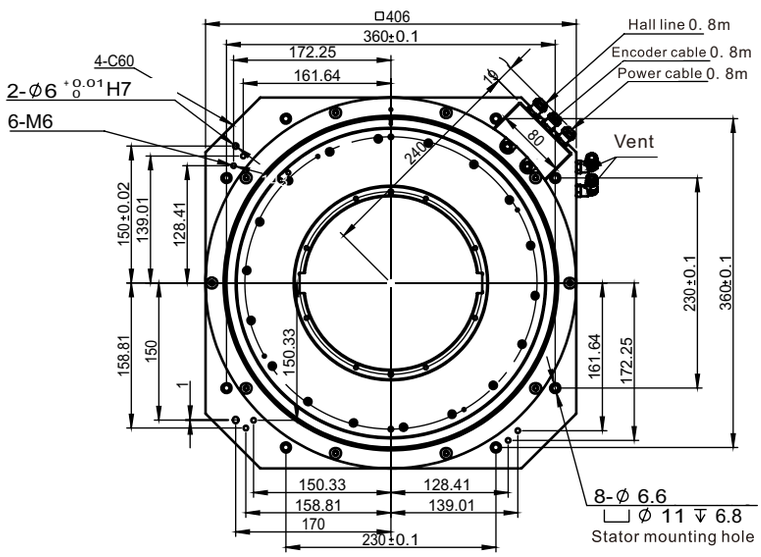
□406
360±0.1
172.25
161.64
4-C60
2-Ø6 +0.01 0 H7
6-M6
Hall line 0. 8m
Encoder cable 0. 8m
Power cable 0. 8m
Vent
240
10
80
150±0.02
139.01
128.41
158.81
150
1
150.33
230±0.1
360±0.1
161.64
172.25
150.33
128.41
158.81
139.01
170
230±0.1
8-Ø 6.6
Ø 11 ↧ 6.8
Stator mounting hole

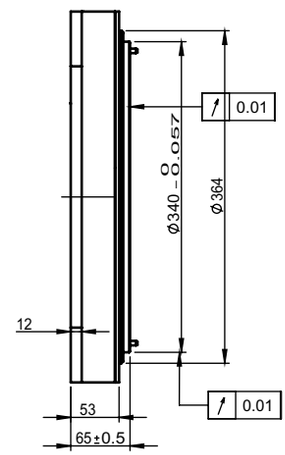
0.01
Ø340 -0.057 0
Ø364
12
53
65±0.5
0.01

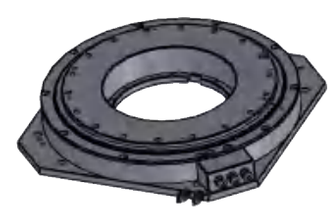

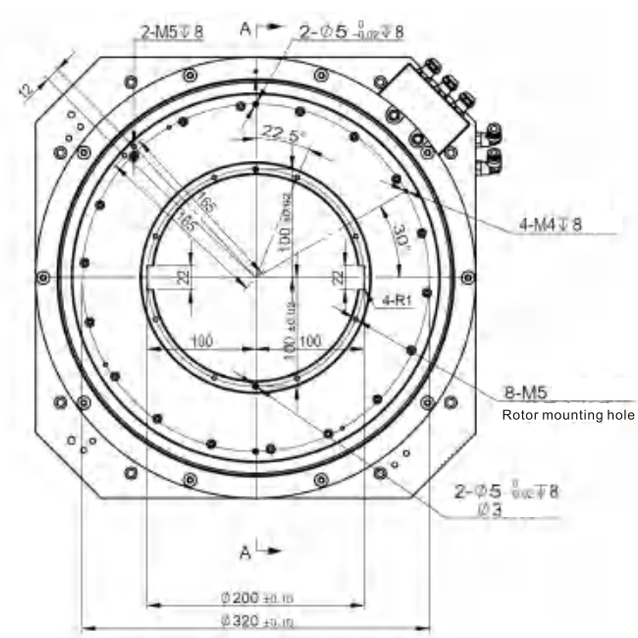
2-M5↧8
A
2-Ø5 0 -0.02 ↧8
12
22.5°
165
165
100 ±0.02
30°
4-M4↧8
22
22
4-R1
100
100
100 ±0.02
8-M5
Rotor mounting hole
2-Ø5 0 -0.02 ↧8
Ø3
A
Ø200 ±0.15
Ø320 ±0.15

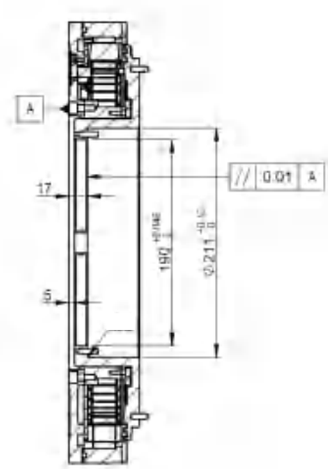
A
17
5
0.01
A
190 +0.046 0
Ø211 -0.15 0

FE2 series

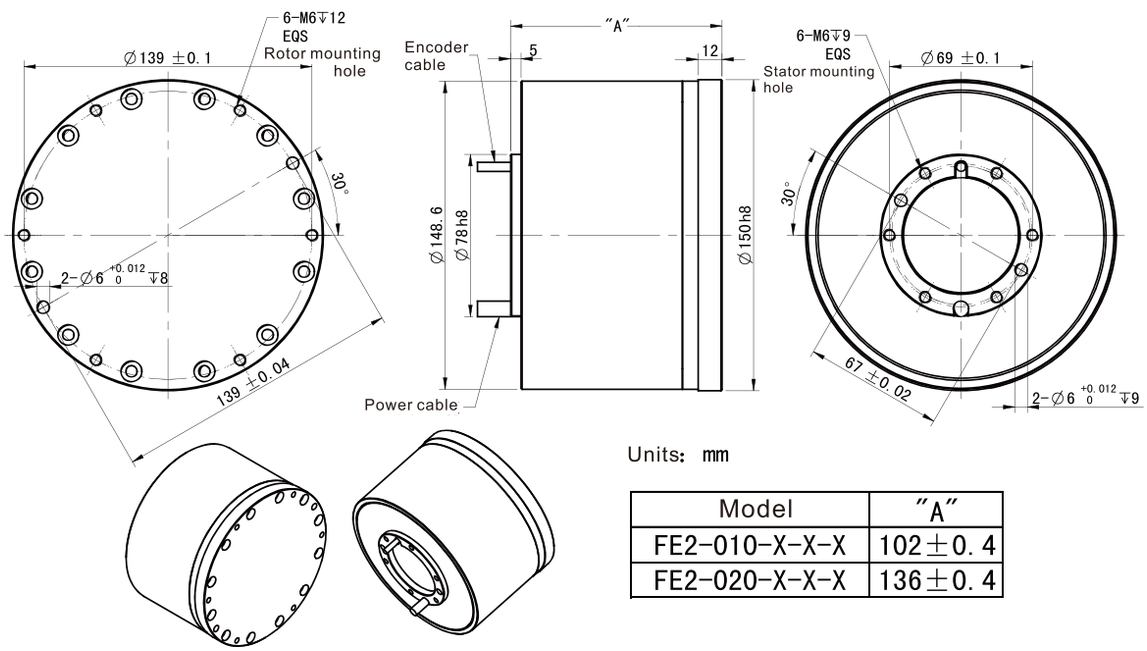

Units: mm

Model	"A"
FE2-010-X-X-X	102±0.4
FE2-020-X-X-X	136±0.4

FE3 series

Motor Model No.: FE3-xDxx-Dxxx-Hxx-Txxx-1-A			0D06-D65-H22-T10	0D40-D120-H25-T36	3D50-D270-H67-T110
Performance Parameters	**Symbol**	**Unit**			
Continuous torque (Tmax)	Tc	Nm	0.062	0.400	3.500
Peak torque	Tp	Nm	0.46	1.20	10.00
Vmax,Tc@Vbus=310Vdc	Nmax,Tc	Rpm	160	120	200
Vmax,Tp@Vbus=310Vdc	Nmax,Tp	Rpm	120	80	500
Vmax,0@Vbus=310Vdc	Nmax,0	Rpm	200	180	600
Encoder (absolute Endat2.2 signal)		P/rev	17590	18534	23600
Repeat Accuracy		arc sec	±2	±3	±2
Positioning Accuracy		arc sec	±30	±30	±20
Continuous current (Tmax)	Ic	Arms	0.6	1.3	2.0
Peak Current (1s)	Ip	Arms	4.5	3.9	6.0
Constant torque (25℃,±5%)	Kt	Nm/Arms	0.103	0.308	1.750
Potential constant (25℃,±5%)	Ke	Vrms/rad/s	0.034	0.103	0.580
Resistance (25℃,±5%)	R	Ω(p-p)	16.50	15.90	10.40
Inductance (25℃,±10%)	L	mH(p-p)	1.62	2.60	2.83
Number of pole-pairs	p		12	16	22
Max allowable coil temperature	Tmax	℃	120	120	120
Motor mass		Kg	0.55	2.00	12.50
Rotor mass	Mr	Kg	0.20	0.80	4.80
Moment of inertia of rotor	Jm	Kg*m2	0.0001	0.0020	0.0490
Axial runout		mm	0.050	0.050	0.030
Radial runout		mm	0.050	0.050	0.030
Cable length (Can be extended/optional)	L	M	0.2	3.0	0.2
Cable Minimum bending radius	R	mm	37.5	37.5	37.5

Remarks: Electrical parameters and encoder types can be adjusted appropriately according to customer requirements, please contact our company for details

FE3 series

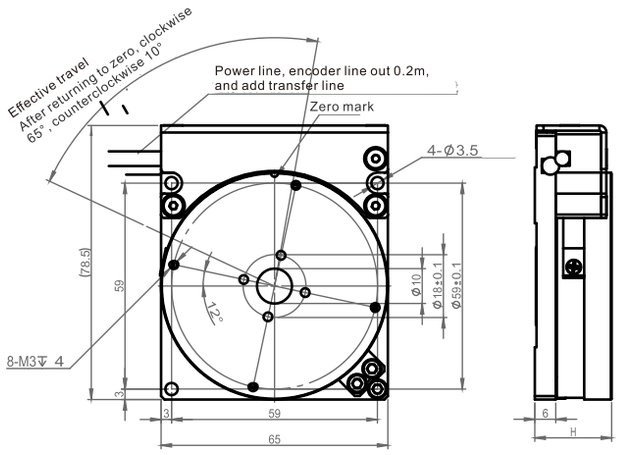

Motor model	"H"
FE3-0D06-D65-H22-T10-1-A	22

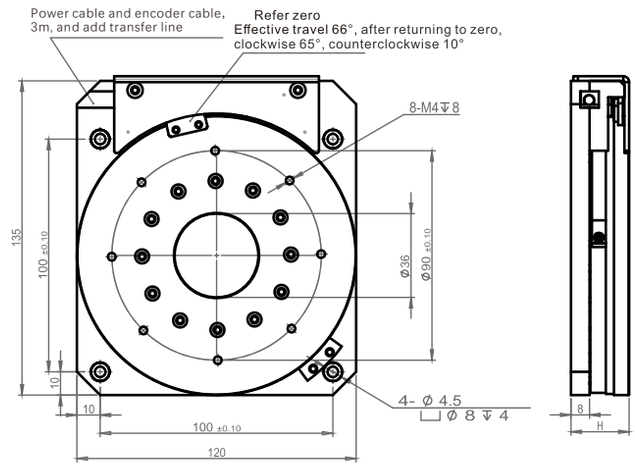

Motor model	"H"
FE3-0D40-D120-H25-T36-1-A	25

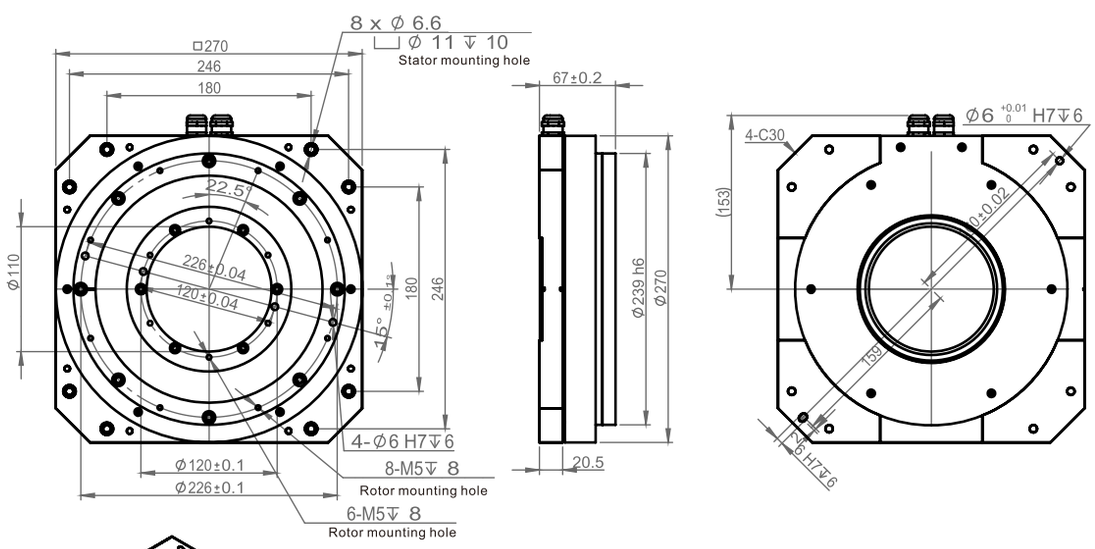

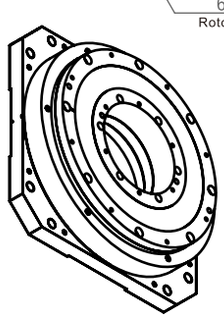

Motor model	"H"
FE3-3D50-D270-H67-T110-1-A	67

BI4 series

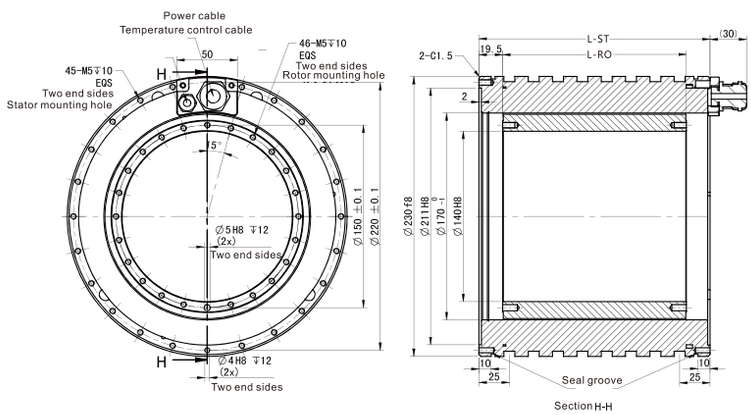

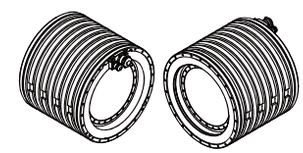

Units: mm

Model	"L-ST"	"L-RO"
BI4-010-X-X-X-X	90	51
BI4-015-X-X-X-X	110	71
BI4-020-X-X-X-X	140	101
BI4-030-X-X-X-X	190	151

Motor Model No.: BI4-xxx-S-x-0-w			010-S-A-0	015-S-B-0	020-S-A-0	030-S-B-0
Performance Parameters	**Symbol**	**Unit**				
Pole pairs	p	—	22	22	22	22
Max.Working Bus Voltage	Vdc	V	540	600	540	600
Peak torque	Tp	Nm	170	235	356	536
Continuous torque (Water cooling)	Tcw	Nm	101	141	209	315
Continuous torque (Natural cooling)	Tc	Nm	48.06	66.60	100.10	150.70
Peak Current	Ip	Arms	7	7	43	29
Continuous current (Water cooling)	Icw	Arms	3.80	3.80	23.00	15.14
Continuous current (Natural cooling)	Ic	Arms	1.80	1.80	11.00	7.25
Torque Constant	Kt	Nm/Arms	26.7	37	9.1	20.8
Back EMF Constant	Ke	Vrms/rad/s	8.9	12.3	3.0	6.9
Back EMF Constant	Ke	Vrms/(1000r/min)	1614	2237	550	1256
Line Resistance	R	Ω	38.0	50.0	2.3	5.8
Line Inductance	L	mH	140.0	180.0	9.0	20.0
Max.speed,Tcw	Nmax,Tcw	rpm	110.0	60.0	460.0	240.0
Max.speed,Tc	Nmax,Tc	rpm	170.0	110.0	580.0	290.0
Max.speed,Tp	Nmax,Tp	rpm	30.0	5.0	300.0	160.0
Max.speed,0	Nmax	rpm	230.0	160.0	670.0	330.0
Power consumption, output Tcw	Plw	W	1152.0	1516.0	2555.1	2769.4
Power consumption, output Tc	Plc	W	259.0	340.0	584.4	633.9
Motor constant	Km	Nm/√W	3.0	3.6	4.1	6.0
Cooling water flow	dV/dt	L/min	3.40	3.90	5.21	7.00
Cooling water temperature difference setting	△θ	k	5	5	5	5
Rated winding temperature	θ	℃	130	130	130	130
Motor Mass	Ms	Kg	7.5	10.0	13.0	32.0
Rotor Mass	Mr	Kg	2.4	3.4	5.0	7.5
Rotor Moment of Inertia	Jm	Kg*m2	0.0137	0.0193	0.0276	0.0415
Cable length (Can be extended optional)	L	M	3.0	3.0	3.0	3.0
Cable Minimum bending radius	R	mm	102.0	102.0	102.0	102.0

Remarks: Electrical parameters and encoder types can be adjusted appropriately according to customer requirements, please contact our company for details

HAN'S MOTOR

BI5 series

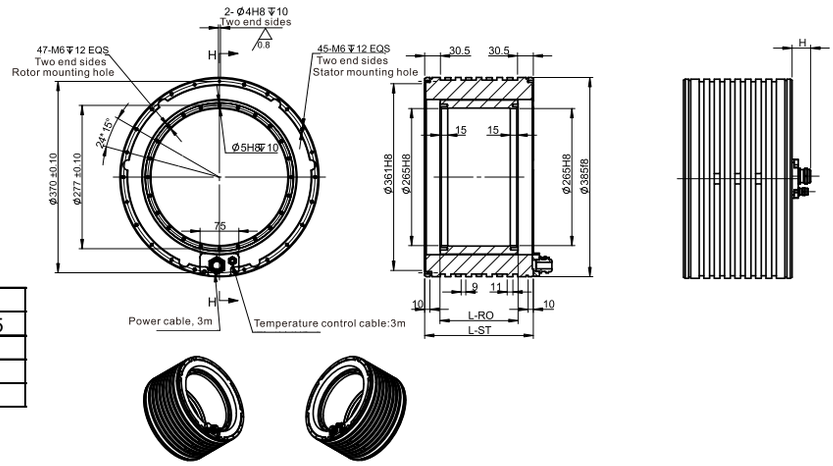

	L-ST	L-RO	H
BI5-050	130	71	34.5
BI5-080	160	101	47
BI5-120	210	151	47
BI5-140	235	175	40

Motor Model No.: BI5-xxx-P-x-0-w			050-P-A-0	080-P-B-0	120-P-B-0	140-P-A-0
Performance Parameters	**Symbol**	**Unit**				
Pole pairs	p	—	33	33	33	33
Max.Working Bus Voltage	Vdc	V	540	600	600	600
Peak torque	Tp	Nm	1000.0	1453.2	2156.8	2440.0
Continuous torque (Water cooling)	Tcw	Nm	546.0	844.2	1226.1	1365.0
Continuous torque (Natural cooling)	Tc	Nm	234.0	365.4	549.0	585.0
Peak Current	Ip	Arms	50	173	165	48.8
Continuous current (Water cooling)	Icw	Arms	21	67	67	21
Continuous current (Natural cooling)	Ic	Arms	9	29	30	9
Torque Constant	Kt	Nm/A	26.0	12.6	18.3	65.0
Back EMF Constant	Ke	Vrms/(rad/s)	8.7	4.2	6.1	21.7
Back EMF Constant	Ke	Vrms/(1000r/min)	1572.0	761.8	1106.4	3930.0
Line Resistance	R	Ω	3.2	0.5	0.6	6.8
Line Inductance	L	mH	14.0	1.2	2.6	38.0
Max.speed,Tcw	Nmax,Tcw	rpm	130	450	300	56
Max.speed,Tc	Nmax,Tc	rpm	190	500	340	85
Max.speed,Tp	Nmax,Tp	rpm	10	330	180	35
Max.speed,0	Nmax	rpm	230	535	370	105
Power consumption, output Tcw	Plw	W	5557.0	4242.1	5656.1	6483.0
Power consumption, output Tc	Plc	W	1021.0	794.7	1134.0	1191.0
Motor constant	Km	Nm/√W	10.0	13.0	16.3	17.0
Cooling water flow	dV/dt	L/min	6.8	7.5	9.5	10.0
Cooling water temperature difference setting	△θ	k	5	5	5	5
Rated winding temperature	θ	℃	130	130	130	130
Motor Mass	Ms	Kg	25.5	34.0	47.0	60.0
Rotor Mass	Mr	Kg	7.5	10.5	15.5	17.8
Rotor Moment of Inertia	Jm	Kg*m2	0.1420	0.2020	0.3020	0.3505
Cable length (Can be extended optional)	L	M	3.0	3.0	3.0	6.0
Cable Minimum bending radius	R	mm	102.0	102.0	102.0	102.0

Remarks: Electrical parameters and encoder types can be adjusted appropriately according to customer requirements, please contact our company for details

BI6 series

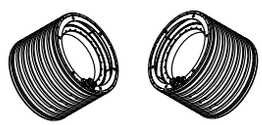

Model	L-ST	L-RO
BI6-030-S-A-0-W	110	71
BI6-040-S-B-0-W	140	101
BI6-080-S-A-0-W	234	180

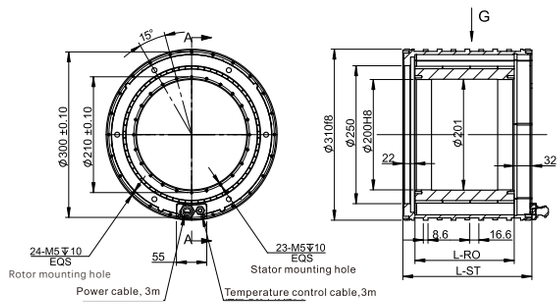

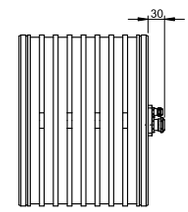

Motor Model No.: BI6-xxx-S-x-0-w			030-S-A-0	040-S-B-0	080-S-A-0
Performance Parameters	**Symbol**	**Unit**			
Pole pairs	p	—	33	33	33
Max.Working Bus Voltage	Vdc	V	540	540	540
Peak torque	Tp	Nm	543	755	1376
Continuous torque (Water cooling)	Tcw	Nm	299	415	757
Continuous torque (Natural cooling)	Tc	Nm	144.0	200.0	364.8
Peak Current	Ip	Arms	33.2	33.2	33.2
Continuous current (Water cooling)	Icw	Arms	16.6	16.6	16.6
Continuous current (Natural cooling)	Ic	Arms	8.0	8.0	8.0
Torque Constant	Kt	Nm/A	18.0	25.0	45.6
Back EMF Constant	Ke	Vrms/(rad/s)	6.0	8.3	15.2
Back EMF Constant	Ke	Vrms/(1000r/min)	1088	1511	2757
Line Resistance	R	Ω	3.8	5.1	8.3
Line Inductance	L	mH	11.5	32.0	40.0
Vdc=540V,Max.speed,Tcw	Nmax,Tcw	rpm	190.0	130.0	70.0
Vdc=540V,Max.speed,Tc	Nmax,Tc	rpm	270.0	190.0	105.0
Vdc=540V,Max.speed,Tp	Nmax,Tp	rpm	105.0	65.0	15.0
Vdc=540V,Max.speed,0	Nmax	rpm	340.0	240.0	140.0
Power consumption, output Tcw	Plw	W	2199	2951	4803
Power consumption, output Tc	Plc	W	511	685	1116
Motor constant	Km	Nm/√W	6.4	7.6	10.9
Cooling water flow	dV/dt	L/min	5.2	7.0	9.8
Cooling water temperature difference setting	△θ	k	5	5	5
Rated winding temperature	θ	℃	130	130	130
Motor Mass	Ms	Kg	15.0	20.0	30.0
Rotor Mass	Mr	Kg	8.8	7.6	22.7
Rotor Moment of Inertia	J	Kg*m2	0.1110	0.1036	0.2862
Cable length (Can be extended optional)	L	M	3.0	3.0	3.0
Cable Minimum bending radius	R	mm	90.0	90.0	90.0

Remarks: Electrical parameters and encoder types can be adjusted appropriately according to customer requirements, please contact our company for details

BI7 series

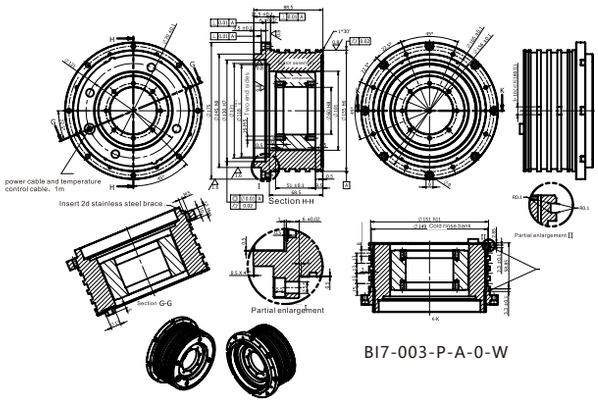

BI7-003-P-A-0-W

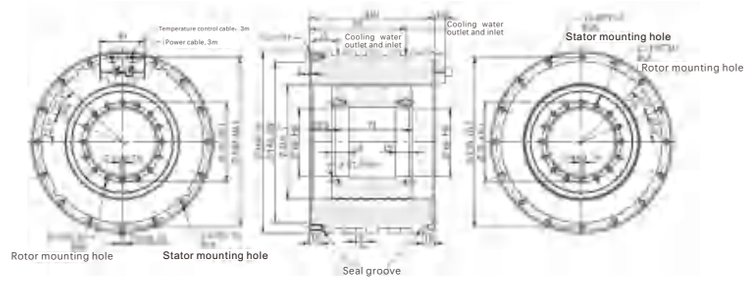

BI7-005-S-A-0-W

Motor Model No.: BI7-xxx-x-A-0-w			003-P-A-0	005-S-A-0
Performance Parameters	**Symbol**	**Unit**		
Pole pairs	p	—	11	11
Max.Working Bus Voltage	Vdc	V	600	540
Peak torque	Tp	Nm	70.0	95.0
Continuous torque (Water cooling)	Tcw	Nm	30.0	50.0
Continuous torque (Natural cooling)	Tc	Nm	12.7	22.0
Peak Current	Ip	Arms	15.7	12.0
Continuous current (Water cooling)	Icw	Arms	5.7	6.1
Continuous current (Natural cooling)	Ic	Arms	2.4	2.7
Torque Constant	Kt	Nm/A	5.3	8.1
Back EMF Constant	Ke	Vrms/(rad/s)	1.8	2.7
Back EMF Constant	Ke	Vrms/(1000r/min)	320.0	492.0
Line Resistance	R	Ω	5.8	9.2
Line Inductance	L	mH	17.0	35.3
Max.speed,Tcw	Nmax,Tcw	rpm	1100	520
Max.speed,Tc	Nmax,Tc	rpm	1200	650
Max.speed,Tp	Nmax,Tp	rpm	750	210
Max.speed,0	Nmax	rpm	1250	750
Power consumption, output Tcw	Plw	W	396	875
Power consumption, output Tc	Plc	W	70	171
Motor constant	Km	Nm/√W	1.52	1.69
Cooling water flow	dV/dt	L/min	3.50	2.61
Cooling water temperature difference setting	△θ	k	5	5
Rated winding temperature	θ	℃	130	130
Motor Mass	Ms	Kg	4.3	5.5
Rotor Mass	Mr	Kg	1.8	2.4
Rotor Moment of Inertia	Jm	Kg*m2	0.0029	0.0039
Cable length (Can be extended optional)	L	M	3.0	3.0
Cable Minimum bending radius	R	mm	37.5	37.5

Remarks: Electrical parameters and encoder types can be adjusted appropriately according to customer requirements, please contact our company for details

BI10 series

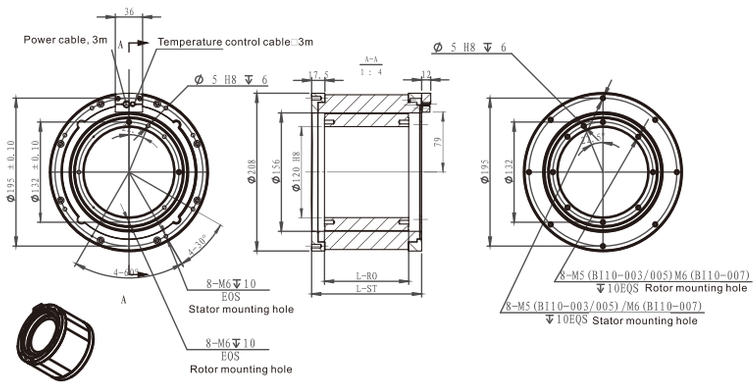

Motor Model No.: BI10-xxx-S-x-0-0			003-S-A-0	005-S-A-0	007-S-B-0
Performance Parameters	**Symbol**	**Unit**			
Pole pairs	p	—	16	16	16
Max.Working Bus Voltage	Vdc	V	310	310	310
Peak torque	Tp	Nm	75	150	207
Continuous torque (Water cooling)	Tcw	Nm	--	—	—
Continuous torque (Natural cooling)	Tc	Nm	25	50	69
Peak Current	Ip	Arms	11	11	13
Continuous current (Water cooling)	Icw	Arms	--	—	—
Continuous current (Natural cooling)	Ic	Arms	3.5	3.5	4.3
Torque Constant	Kt	Nm/A	7.3	14.5	15.8
Back EMF Constant	Ke	Vrms/(rad/s)	2.4	4.8	5.3
Back EMF Constant	Ke	Vrms/(1000r/min)	438.0	877.0	955.0
Line Resistance	R	Ω	4.4	8.0	6.0
Line Inductance	L	mH	11.0	18.0	16.3
Vdc=310V,Max.speed,Tcw	Nmax,Tcw	rpm	--	—	—
Vdc=310V,Max.speed,Tc	Nmax,Tc	rpm	410	200	180
Vdc=310V,Max.speed,Tp	Nmax,Tp	rpm	300	115	110
Vdc=310V,Max.speed,0	Nmax	rpm	450	240	210
Power consumption, output Tcw	Plw	W	--	—	—
Power consumption, output Tc	Plc	W	113.0	206.0	237.0
Motor constant	Km	Nm/√W	2.4	3.5	4.5
Cooling water flow	dV/dt	L/min	--	—	—
Cooling water temperature difference setting	△θ	k	--	—	—
Rated winding temperature	θ	℃	120	120	120
Motor Mass	Ms	Kg	7.0	10.0	13.5
Rotor Mass	Mr	Kg	2.4	4.4	11.0
Rotor Moment of Inertia	Jm	Kg*m2	0.0110	0.0209	0.0411
Cable length (Can be extended optional)	L	M	3.0	3.0	3.0
Cable Minimum bending radius	R	mm	37.5	37.5	37.5

Remarks: Electrical parameters and encoder types can be adjusted appropriately according to customer requirements, please contact our company for details

HAN'S MOTOR

BI15 series

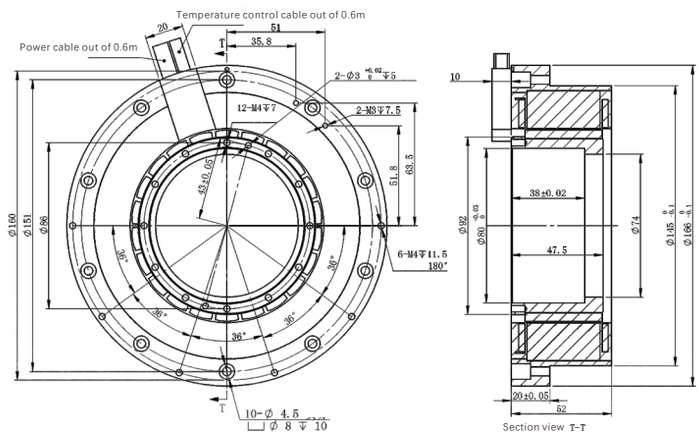

Motor Model No.: BI15-xxx-S-A-0-A			002-S-A-0
Performance Parameters	**Symbol**	**Unit**	
Pole pairs	p	—	11
Max.Working Bus Voltage	Vdc	V	310
Peak torque	Tp	Nm	45
Continuous torque (Water cooling)	Tcw	Nm	--
Continuous torque (Natural cooling)	Tc	Nm	15
Peak Current	Ip	Arms	6.7
Continuous current (Water cooling)	Icw	Arms	--
Continuous current (Natural cooling)	Ic	Arms	2.23
Torque Constant	Kt	Nm/A	6.72
Back EMF Constant	Ke	Vrms/(rad/s)	2.25
Back EMF Constant	Ke	Vrms/(1000r/min)	406
Line Resistance	R	Ω	10.4
Line Inductance	L	mH	40.5
Vdc=310V,Max.speed,Tcw	Nmax,Tcw	rpm	--
Vdc=310V,Max.speed,Tc	Nmax,Tc	rpm	360
Vdc=310V,Max.speed,Tp	Nmax,Tp	rpm	290
Vdc=310V,Max.speed,0	Nmax	rpm	500
Power consumption, output Tcw	Plw	W	--
Power consumption, output Tc	Plc	W	77.6
Motor constant	Km	Nm/√W	1.7
Cooling water flow	dV/dt	L/min	--
Cooling water temperature difference setting	△θ	k	--
Rated winding temperature	θ	℃	120
Motor Mass	Ms	Kg	2.58
Rotor Mass	Mr	Kg	0.89
Rotor Moment of Inertia	Jm	Kg*m2	0.0016
Cable length (Can be extended optional)	L	M	3.0
Cable Minimum bending radius	R	mm	37.5

Remarks: Electrical parameters and encoder types can be adjusted appropriately according to customer requirements, please contact our company for details

HAN'S MOTOR

BI16 series

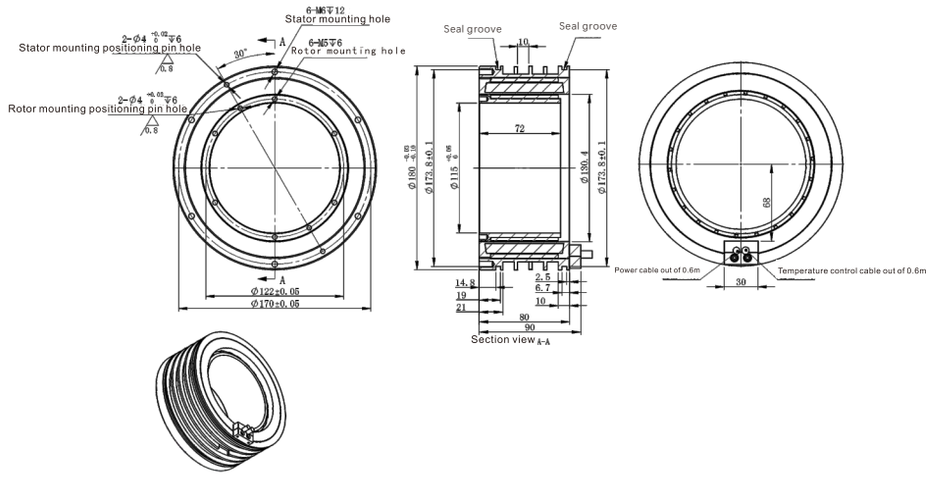

Motor Model No.: BI16-xxx-S-A-0-W			003-S-A-0
Performance Parameters	**Symbol**	**Unit**	
Pole pairs	p	—	11
Max.Working Bus Voltage	Vdc	V	310
Peak torque	Tp	Nm	90
Continuous torque (Water cooling)	Tcw	Nm	30
Continuous torque (Natural cooling)	Tc	Nm	24.6
Peak Current	Ip	Arms	9.0
Continuous current (Water cooling)	Icw	Arms	2.7
Continuous current (Natural cooling)	Ic	Arms	2.2
Torque Constant	Kt	Nm/A	11.2
Back EMF Constant	Ke	Vrms/(rad/s)	4.05
Back EMF Constant	Ke	Vrms/(1000r/min)	731
Line Resistance	R	Ω	16.8
Line Inductance	L	mH	40.2
Vdc=310V,Max.speed,Tcw	Nmax,Tcw	rpm	200
Vdc=310V,Max.speed,Tc	Nmax,Tc	rpm	180
Vdc=310V,Max.speed,Tp	Nmax,Tp	rpm	50
Vdc=310V,Max.speed,0	Nmax,0	rpm	300
Power consumption, output Tcw	Plw	W	184
Power consumption, output Tc	Plc	W	122
Motor constant	Km	Nm/√W	2.2
Cooling water flow	dV/dt	L/min	4
Cooling water temperature difference setting	△θ	k	5
Rated winding temperature	θ	℃	120
Motor Mass	Ms	Kg	3.58
Rotor Mass	Mr	Kg	1.37
Rotor Moment of Inertia	Jm	Kg*m2	0.0050
Cable length (Can be extended optional)	L	M	0.5
Cable Minimum bending radius	R	mm	37.5

Remarks: Electrical parameters and encoder types can be adjusted appropriately according to customer requirements, please contact our company for details

HANS Series Torque Motor

- Diree, high ct drivdynamic response
- High precision
- Integrated BISS-C interface absolute position feedback
- Inner rotor/outer rotor structure
- High speed/low speed winding
- Standard series products
- Customizable development

Frame Torque Motor HANS Series Selection

Model	Center Hole (mm)	Outer Diameter (mm)	Height (mm)	Repeatability Accuracy (Arc sec)	Spec.	Continuous torque（Nm）	Peak torque（Nm）
HANS-B	10	85	74	±2	HANS-B-001-D85-H74-T10-2-A	1	3
	19	112	65		HANS-B-003-D112-H65-T19-1-A	3. 3	10
HANS-C（Can add holding brake）	45	170	60	±1.5	HANS-C-003-D170-H91-T45-1-F	3	9
	45	170	112		HANS-C-007-D170-H110-T45-1-F	9. 3	27. 7
	42	168	100		HANS-C-015-D168-H100-T42-1-F	17	51
	45	170	132		HANS-C-015-D170-H132-T45-1-F	17	51
HANS-D	85	270	98	±1.5	HANS-D-035-D270-H098-T85-1-F	35	105
			106		HANS-D-050-D270-H106-T85-1-F	50	150
			113		HANS-D-065-D270-H113-T85-1-F	65	195
			138		HANS-D-100-D270-H138-T85-1-F	110	328
HANS-E	85	270	147.5	±1.5	HANS-E-050-D270-H145-T85-1-F	50	150
			172.5		HANS-E-100-D270-H170-T85-1-F	100	280
			197.5		HANS-E-150-D270-H195-T85-1-F	150	430
HANS-F	43	220	110	±1.5	HANS-F-020-D220-H110-T43-1-F	20	60
			120		HANS-F-030-D220-H120-T43-1-F	30	90
			125		HANS-F-035-D220-H125-T43-1-F	35	105
HANS-G	43	208	90	±1.5	HANS-G-025-D208-H090-T43-1-A	25	75
			130		HANS-G-050-D208-H130-T43-1-A	50	150
			170		HANS-G-075-D208-H170-T43-1-A	74	222
HANS-H	25	154	55	±1.5	HANS-H-005-D154-H55-T25-1-A	5	15
			64.5		HANS-H-010-D154-H65-T25-1-A	10	30
			90		HANS-H-015-D154-H90-T25-1-A	17. 7	51

HANS Series Torque Motor Naming Rules

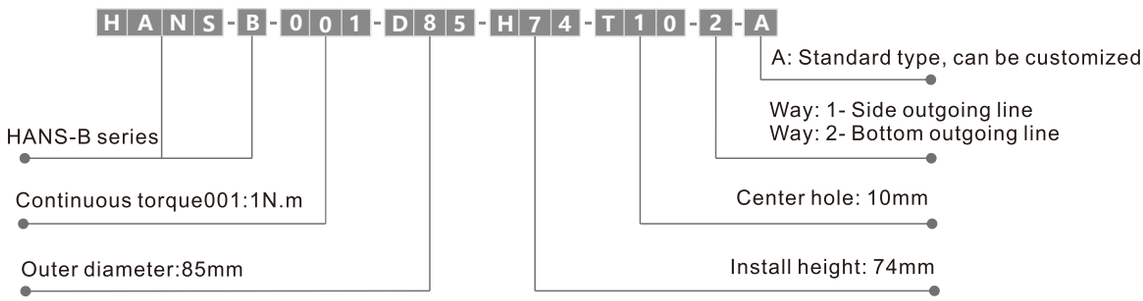

Selection guide:
HANS-B-001-D85-H74-T10-2-A:Indicates HANS-B series motors,Continuous torque001:1N.m, Outer diameter:85mm,Install height: 74mm,Center hole: 10mm,Bottom outgoing line,Standard type, can be customized

Male head

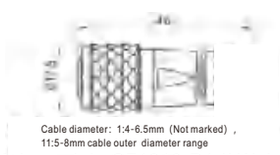

Male model: SF1210-P4-II Weipu

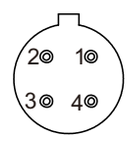

Diagram of aviation plug pin

Female head

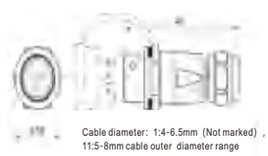

Female model: SF1211-S4-II Weipu

Pin definition	
1	U
2	V
3	W
4	PE

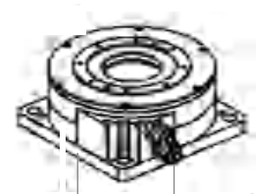

Motor out of line end

F/B series torque motor

remark:the standard length of the out of line is 0.2m, which can be customized according to customer requirements

HANS Series Power Extension Cord Naming Rules

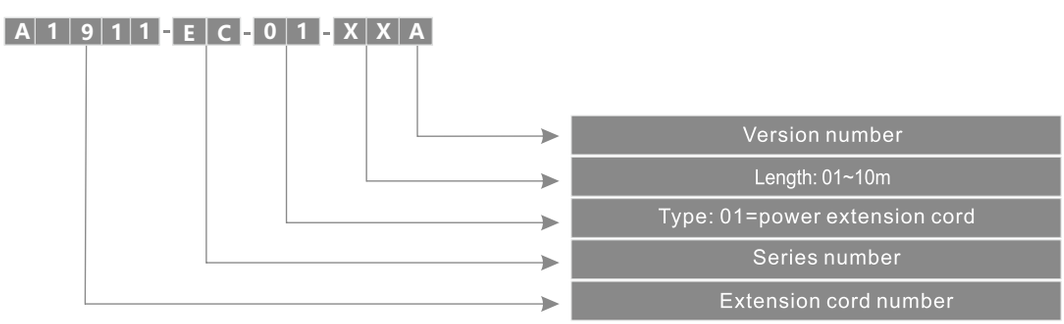

Selection guide:
A1911-EC-01-XXA: Power extension cord code A1911, serial number EC,
01 stands for power extension cord, cord length between 1 to 10 meters, version A.

Diagram of Power Extension Cord

PIN		Line color
1	U	black1
2	V	black2
3	W	black3
4	ground wire	yellow-green
shell	shielded wire	

Pin definition of aviation plug

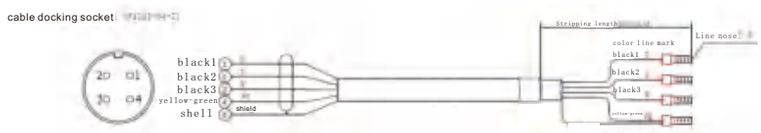

Cable	Describe
black1	U
black2	V
black3	W
yellow-green shielded wire	PE

Definition of cable outlet

HANS Series Encoder Extension Cord Selection Rules

Encoder Extension Cord Selection Rules:

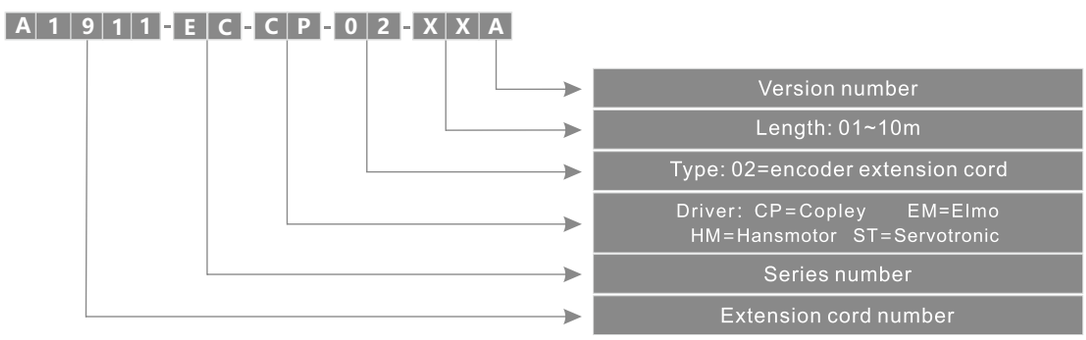

Selection guide:

A1911-EC-CP-02-XXA: Power extension cord coding A1911, serial number EC, Copleydriver, 02represents the encoder extension line, the line length is 1 meter to 10 meters (can be customized according to customer needs), the version number is A version.

Driver selection suggestion: optional direct drive servo driver that supports BISS-C protocol (above 19bits) and third-party motor parameters

Schematic diagram of encoder extension cable

PIN	Describe	line color
1	GND	brown
2	DATA+	pink
3		
4	CLK+	yellow
5	5V	white
6	DATA-	gray
7		
8	CLK-	green
9		
shell	shield	shielded wire

Definition of DB-9 female head wiring

PIN	Describe	line color
1	DATA+	pink
2	CLK+	yellow
11	+5V	white
14	DATA-	gray
15	CLK-	green
24	GND	brown
26	shield	shielded wire

Definition of 26PIN connector wiring

Remarks: Power extension cables and encoder adapter cables can be customized according to customer needs.

HANS Series Extension Cord Selection Rules

Model	Length	Definition	Remark
A1911-EC-01-02A	2	Power extension cord	Commonly used
A1911-EC-01-03A	3	Power extension cord	Commonly used
A1911-EC-01-04A	4	Power extension cord	Commonly used
A1911-EC-01-05A	5	Power extension cord	Commonly used
A1911-EC-01-06A	6	Power extension cord	Commonly used
A1911-EC-01-08A	8	Power extension cord	Commonly used
A1911-EC-01-10A	10	Power extension cord	Commonly used
A1911-EC-ST-02-02A	2	Encoder transfer cord	Match Servotronix
A1911-EC-ST-02-03A	3	Encoder transfer cord	Match Servotronix
A1911-EC-ST-02-04A	4	Encoder transfer cord	Match Servotronix
A1911-EC-ST-02-05A	5	Encoder transfer cord	Match Servotronix
A1911-EC-ST-02-06A	6	Encoder transfer cord	Match Servotronix
A1911-EC-ST-02-08A	8	Encoder transfer cord	Match Servotronix
A1911-EC-ST-02-10A	10	Encoder transfer cord	Match Servotronix
A1911-EC-HM-02-02A	2	Encoder transfer cord	Match HANS
A1911-EC-HM-02-04A	4	Encoder transfer cord	Match HANS
A1914-EC-01-02A	2	Power extension cord	Commonly used
A1914-EC-01-03A	3	Power extension cord	Commonly used
A1914-EC-01-04A	4	Power extension cord	Commonly used
A1914-EC-01-05A	5	Power extension cord	Commonly used
A1914-EC-01-06A	6	Power extension cord	Commonly used
A1914-EC-01-08A	8	Power extension cord	Commonly used
A1914-EC-01-10A	10	Power extension cord	Commonly used
A1914-EC-ST-02-02A	2	Encoder transfer cord	Match Servotronix
A1914-EC-ST-02-03A	3	Encoder transfer cord	Match Servotronix
A1914-EC-ST-02-04A	4	Encoder transfer cord	Match Servotronix
A1914-EC-ST-02-05A	5	Encoder transfer cord	Match Servotronix
A1914-EC-ST-02-06A	6	Encoder transfer cord	Match Servotronix
A1914-EC-ST-02-08A	8	Encoder transfer cord	Match Servotronix
A1914-EC-ST-02-010A	10	Encoder transfer cord	Match Servotronix

HANS-B Series Frame Outer Rotor Torque Motor

Motor Model No.:HANS-B-xxx-Dxx-Hxx-Txx-x-A			B-001	B-003
Performance Parameters	**Symbol**	**Unit**		
Cable Outlet			1	1
Outer Diameter	D1	mm	85	112
Center Hole	D2	mm	10	19
Installation Height	H	mm	74	65
Continuous torque (Tmax)	Tc	Nm	1.9	3.0
Peak torque	Tp	Nm	5.5	10.0
Vmax,Tc@Vbus=310Vdc	Nmax,Tc	Rpm	1000	700
Vmax,Tp@Vbus=310Vdc	Nmax,Tp	Rpm	800	500
Vmax,0@Vbus=310Vdc	Nmax,0	Rpm	1200	800
Encoder (BISS-C)		P/rev	19bits	19bits
Positioning Accuracy		arc sec	±10	±10
Repeat Accuracy		arc sec	±2	±2
Maximum axial load (recommend)	Fa	N	700	700
Maximum torque load (recommend)	T	Nm	10	10
Motor outlet		M	0.3	0.3
Cable bending radius (within drag chain)		mm	30	30
Continuous current (Tmax)	Ic	Arms	1.6	1.5
Peak Current (1s)	Ip	Arms	4.8	4.5
Torque Constant(within 25℃±5℃)	Tf	Nm/Arms	1.18	2.00
Electromotive constant(within 25℃±5℃)	Te	Vrms/rad/s	0.39	0.67
Resistance(within 25℃±5℃)	R	Ω(p-p)	8.3	6.1
Inductance(within 25℃±5℃)	L	mH(p-p)	15.6	6.3
Pole pairs	p		5	8
Max.coil temperature	Tmax	℃	120	120
Motor Mass		KG	2.1	3.9
Mover Mass	Mc	KG	1.1	1.4
Rotor Moment of Inertia	Jm	Kg*m2	0.0013	0.0027
Axial Runout		mm	0.03	0.03
Radial Runout		mm	0.03	0.03

HANS-B Series Frame Outer Rotor Torque Motor

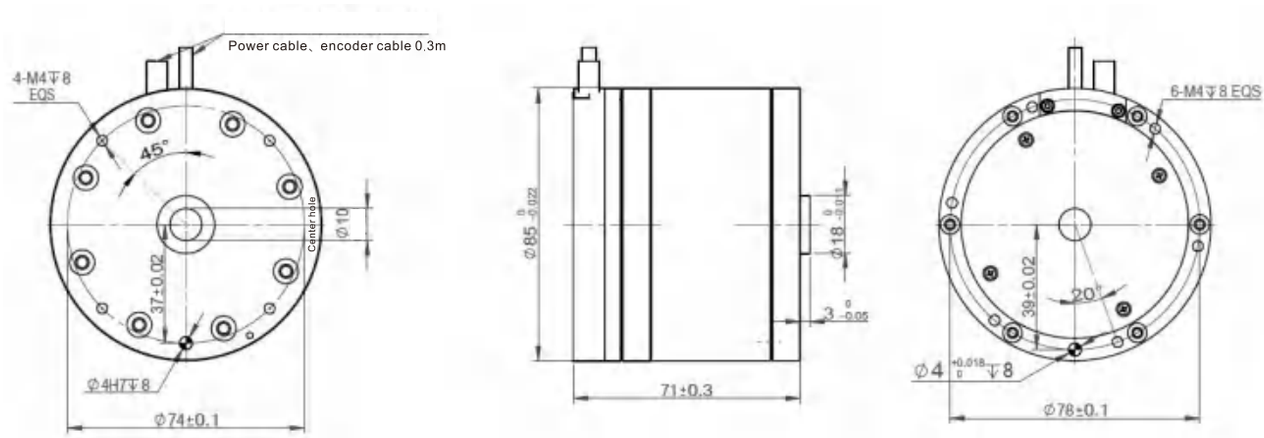

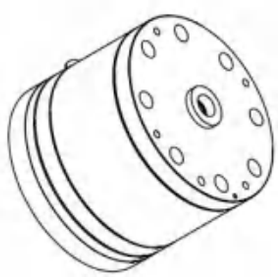

Motor model	"H"
HANS-B-001-D85-H74-T10-2-A	74

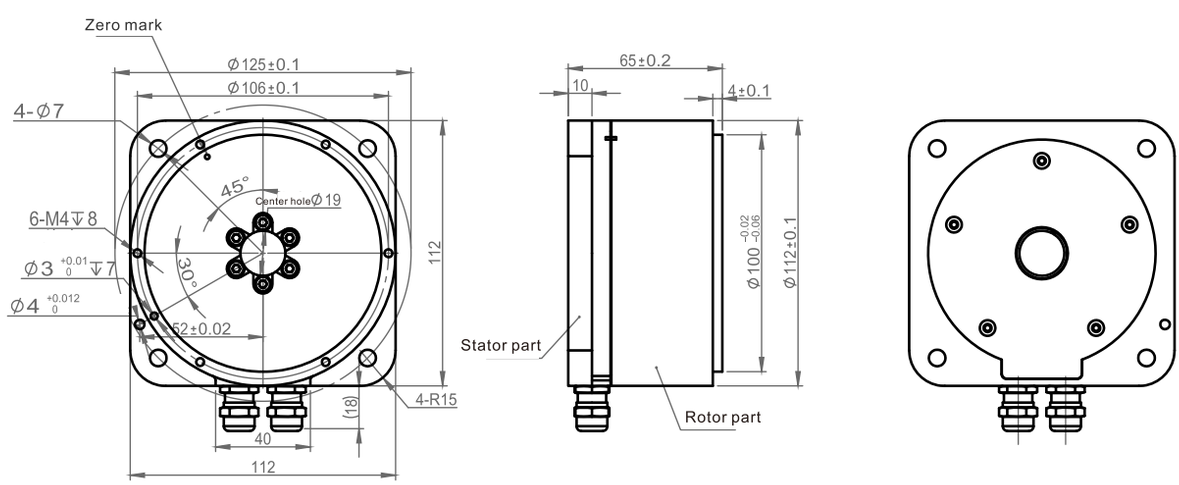

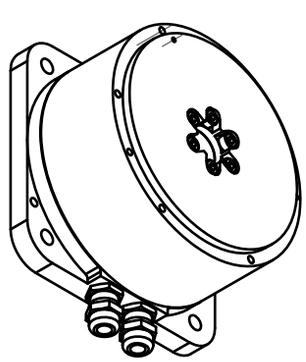

Motor model	"H"
HANS-B-003-D112-H65-T19-1-A	65

HAN'S MOTOR

HANS-C Series Frame Outer Rotor Torque Motor

Motor Model No.:HANS-C-xxx-Dxxx-Hxxx-Txx-1-F			C-003	C-007	C-015
Performance Parameters	Symbol	Unit			
Cable Outlet			1	1	1
Outer Diameter	D1	mm	170	170	170
Center Hole	D2	mm	45	45	45
Installation Height	H	mm	95	112	132
Continuous torque (Tmax)	Tc	Nm	3	9	17
Peak torque	Tp	Nm	9.0	27.7	51.0
Vmax,Tc@Vbus=310Vdc	Nmax,Tc	Rpm	600	600	450
Vmax,Tp@Vbus=310Vdc	Nmax,Tp	Rpm	500	500	350
Vmax,0@Vbus=310Vdc	Nmax,0	Rpm	800	800	500
Encoder (BISS-C)		P/rev	23bits	23bits	23bits
Positioning Accuracy		arc sec	±10/±5	±10/±5	±10/±5
Repeat Accuracy		arc sec	±1.5	±1.5	±1.5
Maximum axial load (recommend)	Fa	N	10000	10000	10000
Maximum torque load (recommend)	T	Nm	40	40	40
Motor outlet		M	0.3	0.3	0.3
Cable bending radius (within drag chain)		mm	37.5	37.5	37.5
Continuous current (Tmax)	Ic	Arms	2.5	2.3	2.5
Peak Current (1s)	Ip	Arms	7.5	6.9	7.5
Torque Constant(within 25℃±5℃)	Tf	Nm/Arms	1.2	4.0	6.8
Electromotive constant(within 25℃±5℃)	Te	Vrms/rad/s	0.4	1.3	2.3
Resistance(within 25℃±5℃)	R	Ω(p-p)	2.6	4.8	6.6
Inductance(within 25℃±5℃)	L	mH(p-p)	6.0	12.5	19.0
Pole pairs	p		8	8	8
Max.coil temperature	Tmax	℃	120	120	120
Motor Mass		KG	8.4	14.5	16.5
Mover Mass	Mc	KG	2	4	6
Rotor Moment of Inertia	Jm	Kg*m2	0.012	0.021	0.027
Axial Runout		mm	0.03	0.03	0.03
Radial Runout		mm	0.03	0.03	0.03

HANS-C Series Frame Outer Rotor Torque Motor

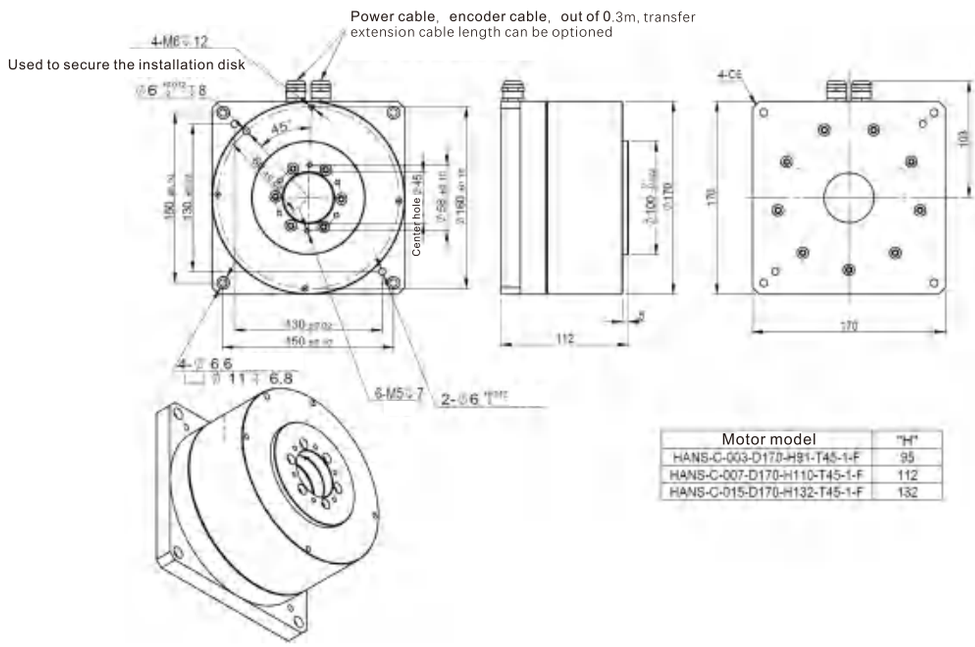

Motor model	"H"
HANS-C-003-D170-H91-T45-1-F	95
HANS-C-007-D170-H110-T45-1-F	112
HANS-C-015-D170-H132-T45-1-F	132

HAN'S MOTOR

HANS-D Series Frame Outer Rotor Torque Motor

Motor Model No.:HANS-D-xxx-Dxxx-Hxxx-T85-X-F			D-035	D-050	D-065	D-100
Performance Parameters	Symbol	Unit				
Cable Outlet			1	1	1	1
Outer Diameter	D1	mm	270	270	270	270
Center Hole	D2	mm	85	85	85	85
Installation Height	H	mm	98	106	113	138
Continuous torque (Tmax)	Tc	Nm	35	50	65	110
Peak torque	Tp	Nm	105	150	195	328
Vmax,Tc@Vbus=310Vdc	Nmax,Tc	Rpm	380	260	200	100
Vmax,Tp@Vbus=310Vdc	Nmax,Tp	Rpm	230	160	120	45
Vmax,0@Vbus=310Vdc	Nmax,0	Rpm	450	300	240	130
Encoder (BISS-C)		P/rev	23bits	23bits	23bits	23bits
Positioning Accuracy		arc sec	±10/±5	±10/±5	±10/±5	±10/±5
Repeat Accuracy		arc sec	±1.5	±1.5	±1.5	±1.5
Maximum axial load (recommend)	Fa	N	20000	20000	20000	20000
Maximum torque load (recommend)	T	Nm	200	200	200	200
Motor outlet		M	0.3	0.3	0.3	0.3
Cable bending radius (within drag chain)		mm	37.5	37.5	37.5	37.5
Continuous current (Tmax)	Ic	Arms	4.5	4.5	4.5	4.2
Peak Current (1s)	Ip	Arms	13.5	13.5	13.5	12.5
Torque Constant(within 25℃±5℃)	Tf	Nm/Arms	7.8	11.2	14.4	26.2
Electromotive constant(within 25℃±5℃)	Te	Vrms/rad/s	2.59	3.70	4.81	8.15
Resistance(within 25℃±5℃)	R	Ω(p-p)	3.8	4.4	5.1	7.2
Inductance(within 25℃±5℃)	L	mH(p-p)	26.0	31.0	36.0	58.0
Pole pairs	p		16	16	16	16
Max.coil temperature	Tmax	℃	120	120	120	120
Motor Mass		KG	31.5	34.2	37.0	45.6
Mover Mass	Mc	KG	10.7	12.4	13.3	14.2
Rotor Moment of Inertia	Jm	Kg*m2	0.1090	0.1170	0.1255	0.1520
Axial Runout		mm	0.05	0.05	0.05	0.05
Radial Runout		mm	0.05	0.05	0.05	0.05

HANS-D Series Frame Outer Rotor Torque Motor

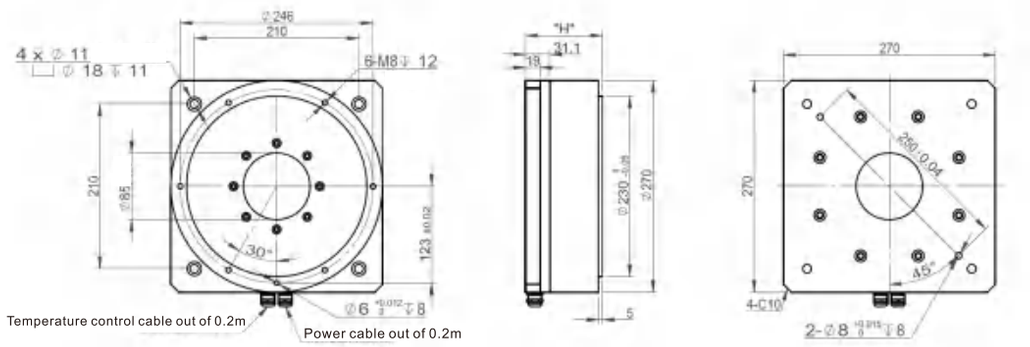

Motor model	"H"
HANS-D-035-D270-H98-T75-1-F	98
HANS-D-050-D270-H106-T85-1-F	106
HANS-D-065-D270-H113-T85-1-F	113
HANS-D-110-D270-H138-T85-1-F	138

HAN'S MOTOR

HANS-E Series Frame Outer Rotor Torque Motor

Motor Model No.:HANS-E-xxx-Dxxx-Hxxx-T85-1-F			E-050	E-100	E-150
Performance Parameters	Symbol	Unit			
Cable Outlet			1	1	1
Outer Diameter	D1	mm	270	270	270
Center Hole	D2	mm	85	85	85
Installation Height	H	mm	147.5	172.5	197.5
Continuous torque (Tmax)	Tc	Nm	50	100	150
Peak torque	Tp	Nm	150	280	430
Vmax,Tc@Vbus=310Vdc	Nmax	Rpm	275	130	80
Vmax,Tp@Vbus=310Vdc	Nmax	Rpm	170	70	30
Vmax,0@Vbus=310Vdc	Nmax	Rpm	320	160	105
Encoder (BISS-C)		P/rev	23bits	23bits	23bits
Positioning Accuracy		arc sec	±10/±5	±10/±5	±10/±5
Repeat Accuracy		arc sec	±1.5	±1.5	±1.5
Maximum axial load (recommend)	Fa	N	20000	20000	20000
Maximum torque load (recommend)	T	Nm	200	200	200
Motor outlet		M	0.3	0.3	0.3
Cable bending radius (within drag chain)		mm	37.5	37.5	37.5
Continuous current (Tmax)	Ic	Arms	4.5	4.5	4.5
Peak Current (1s)	Ip	Arms	13.5	13.5	13.5
Torque Constant(within 25℃±5℃)	Tf	Nm/Arms	10.8	21.7	32.5
Electromotive constant(within 25℃±5℃)	Te	Vrms/rad/s	3.6	7.2	10.8
Resistance(within 25℃±5℃)	R	Ω(p-p)	4.4	6.5	9.0
Inductance(within 25℃±5℃)	L	mH(p-p)	31	52	75
Pole pairs	p		16	16	16
Max.coil temperature	Tmax	℃	120	120	120
Motor Mass		KG	29	39	49
Mover Mass	Mc	KG	12	14.5	17
Rotor Moment of Inertia	Jm	Kg*m2	0.10	0.12	0.14
Axial Runout		mm	0.05	0.05	0.05
Radial Runout		mm	0.05	0.05	0.05

HANS-E Series Frame Outer Rotor Torque Motor

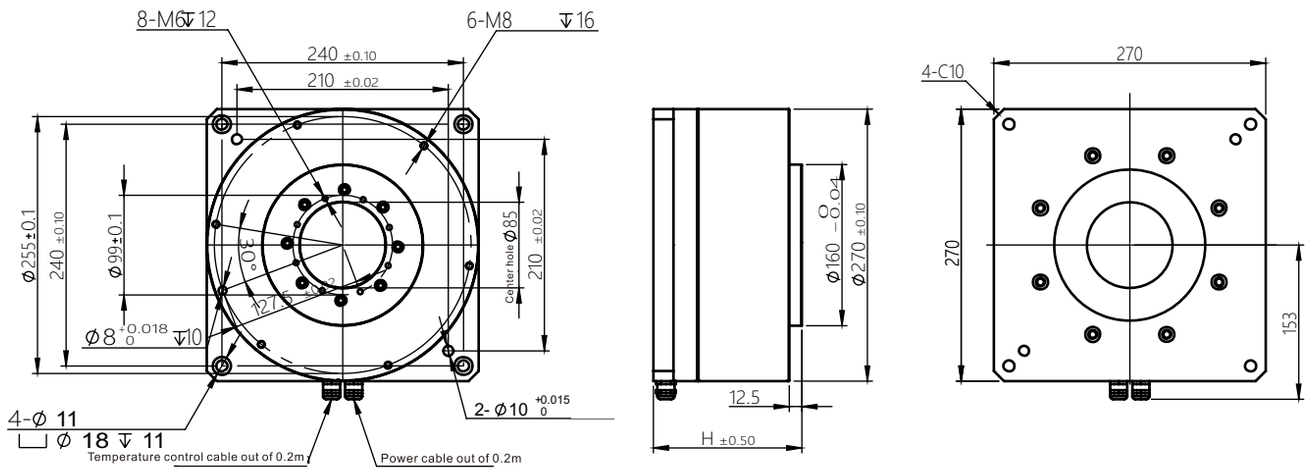

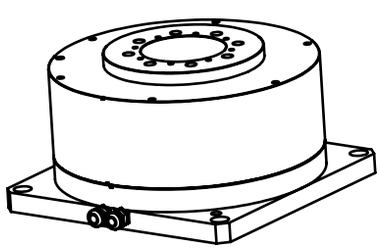

Motor model	"H"
HANS-E-050-D270-H145-T85-1-F	147.5
HANS-E-100-D270-H170-T85-1-F	172.5
HANS-E-150-D270-H195-T85-1-F	197.5

HAN'S MOTOR

HANS-F Series Frame Outer Rotor Torque Motor

Motor Model No.:HANS-F-xxx-Dxxx-Hxxx-T43-1-A			F-020	F-030	F-035
Performance Parameters	Symbol	Unit			
Cable Outlet			1	1	1
Outer Diameter	D1	mm	220	220	220
Center Hole	D2	mm	43	43	43
Installation Height	H	mm	110	120	125
Continuous torque (Tmax)	Tc	Nm	20	30	35
Peak torque	Tp	Nm	60	90	105
Vmax,Tc@Vbus=310Vdc	Nmax,Tc	Rpm	400	265	225
Vmax,Tp@Vbus=310Vdc	Nmax,Tp	Rpm	290	180	150
Vmax,0@Vbus=310Vdc	Nmax,0	Rpm	450	300	260
Encoder (BISS-C)		P/rev	23bits	23bits	23bits
Positioning Accuracy		arc sec	±10/±5	±10/±5	±10/±5
Repeat Accuracy		arc sec	±1.5	±1.5	±1.5
Maximum axial load (recommend)	Fa	N	15000	15000	15000
Maximum torque load (recommend)	T	Nm	150	150	150
Motor outlet		M	0.3	0.3	0.3
Cable bending radius (within drag chain)		mm	37.5	37.5	37.5
Continuous current (Tmax)	Ic	Arms	2.6	2.6	2.6
Peak Current (1s)	Ip	Arms	7.8	7.8	7.8
Torque Constant(within 25℃±5℃)	Tf	Nm/Arms	7.69	11.53	13.46
Electromotive constant(within 25℃±5℃)	Te	Vrms/rad/s	2.56	3.80	4.50
Resistance(within 25℃±5℃)	R	Ω(p-p)	5.6	6.9	7.8
Inductance(within 25℃±5℃)	L	mH(p-p)	29	39	44
Pole pairs	p		16	16	16
Max.coil temperature	Tmax	℃	120	120	120
Motor Mass		KG	18.7	23.6	26.6
Mover Mass	Mc	KG	5.3	7.2	8.2
Rotor Moment of Inertia	Jm	Kg*m2	0.025	0.035	0.040
Axial Runout		mm	0.05	0.05	0.05
Radial Runout		mm	0.05	0.05	0.05

HANS-F Series Frame Outer Rotor Torque Motor

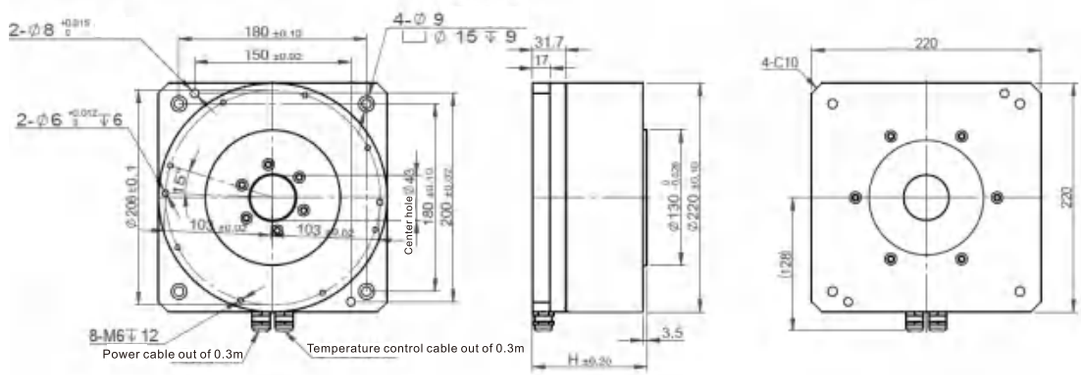

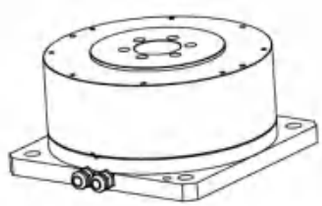

Motor model	"H"
HANS-F-020-H110-T43-1-F	110
HANS-F-030-H120-T43-1-F	120
HANS-F-035-H125-T43-1-F	125

HAN'S MOTOR

HANS-G Series Frame Outer Rotor Torque Motor

Motor Model No.:HANS-G-xxx-Dxxx-Hxxx-T43-1-A			G-025	G-050	G-070
Performance Parameters	**Symbol**	**Unit**			
Cable Outlet			1	1	1
Outer Diameter	D1	mm	208	208	208
Center Hole	D2	mm	43	43	43
Installation Height	H	mm	90	130	170
Continuous torque (Tmax)	Tc	Nm	25	50	74
Peak torque	Tp	Nm	75	150	222
Vmax,Tc@Vbus=310Vdc	Nmax,Tc	Rpm	550	260	170
Vmax,Tp@Vbus=310Vdc	Nmax,Tp	Rpm	460	190	110
Vmax,0@Vbus=310Vdc	Nmax,0	Rpm	600	300	200
Encoder (BISS-C)		P/rev	23bits	23bits	23bits
Positioning Accuracy		arc sec	±10/±5	±10/±5	±10/±5
Repeat Accuracy		arc sec	±1.5	±1.5	±1.5
Maximum axial load (recommend)	Fa	N	15000	15000	15000
Maximum torque load (recommend)	T	Nm	200	200	200
Motor outlet		M	0.2	0.2	0.2
Cable bending radius (within drag chain)		mm	37.5	37.5	37.5
Continuous current (Tmax)	Ic	Arms	4.3	4.3	4.3
Peak Current (1s)	Ip	Arms	13	13	13
Torque Constant(within 25℃±5℃)	Tf	Nm/Arms	5.75	11.50	17.20
Electromotive constant(within 25℃±5℃)	Te	Vrms/rad/s	1.92	3.83	5.73
Resistance(within 25℃±5℃)	R	Ω(p-p)	2.5	4.5	5.7
Inductance(within 25℃±5℃)	L	mH(p-p)	7.4	12.2	16.0
Pole pairs	p		16	16	16
Max.coil temperature	Tmax	℃	120	120	120
Motor Mass		KG	17	27	32
Mover Mass	Mc	KG	6.0	8.3	9.2
Rotor Moment of Inertia	Jm	Kg*m2	0.015	0.027	0.031
Axial Runout		mm	0.05	0.05	0.05
Radial Runout		mm	0.05	0.05	0.05

HANS-G Series Frame Outer Rotor Torque Motor

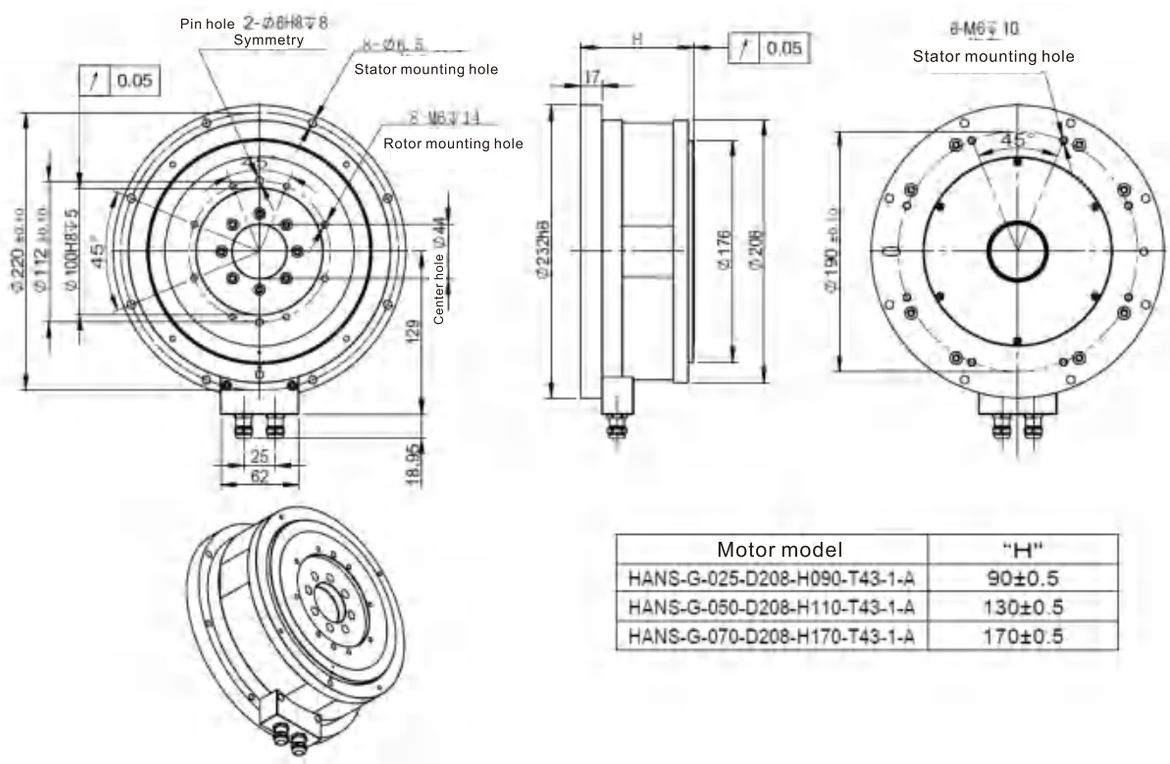

Motor model	"H"
HANS-G-025-D208-H090-T43-1-A	90±0.5
HANS-G-050-D208-H110-T43-1-A	130±0.5
HANS-G-070-D208-H170-T43-1-A	170±0.5

HAN'S MOTOR

HANS-H Series Frame Outer Rotor Torque Motor

Motor Model No.:HANS-H-xxx-Dxxx-Hxxx-T25-1-A			H-005	H-010	H-015
Performance Parameters	Symbol	Unit			
Cable Outlet			1	1	1
Outer Diameter	D1	mm	154	154	154
Center Hole	D2	mm	25	25	25
Installation Height	H	mm	55	73	90
Continuous torque (Tmax)	Tc	Nm	5.0	10.0	17.7
Peak torque	Tp	Nm	15	30	51
Vmax,Tc@Vbus=310Vdc	Nmax,Tc	Rpm	600	600	350
Vmax,Tp@Vbus=310Vdc	Nmax,Tp	Rpm	500	500	200
Vmax,0@Vbus=310Vdc	Nmax,0	Rpm	800	800	450
Encoder (BISS-C)		P/rev	23bits	23bits	23bits
Positioning Accuracy		arc sec	±10/±5	±10/±5	±10/±5
Repeat Accuracy		arc sec	±1.5	±1.5	±1.5
Maximum axial load (recommend)	Fa	N	5000	5000	5000
Maximum torque load (recommend)	T	Nm	200	200	200
Motor outlet		M	0.2	0.2	0.2
Cable bending radius (within drag chain)		mm	37.5	37.5	37.5
Continuous current (Tmax)	Ic	Arms	2.3	2.3	2.3
Peak Current (1s)	Ip	Arms	7	7	7
Torque Constant(within 25℃±5℃)	Tf	Nm/Arms	2.16	3.70	7.70
Electromotive constant(within 25℃±5℃)	Te	Vrms/rad/s	0.72	1.23	2.60
Resistance(within 25℃±5℃)	R	Ω(p-p)	6	8	13
Inductance(within 25℃±5℃)	L	mH(p-p)	15	20	35
Pole pairs	p		8	8	8
Max.coil temperature	Tmax	℃	120	120	120
Motor Mass		KG	4.2	5.5	8.0
Mover Mass	Mc	KG	1.1	1.5	2.5
Rotor Moment of Inertia	Jm	Kg*m2	0.0021	0.0029	0.0049
Axial Runout		mm	0.03	0.03	0.03
Radial Runout		mm	0.03	0.03	0.03

HANS-H Series Frame Outer Rotor Torque Motor

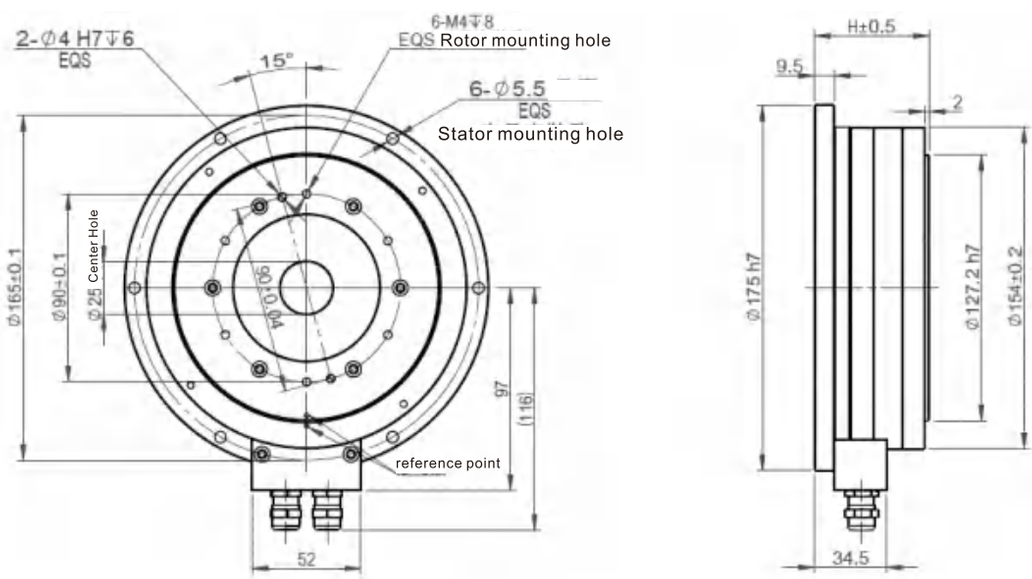

Motor model	"H"
HANS-H-005-D154-H55-T25-1-A	55
HANS-H-010-D154-H65-T25-1-A	64.5
HANS-H-015-D154-H90-T25-1-A	90

Hans Motor Torque motor requirements table

Date:

Company: Email: Tel: Fax:		contact: Title:
Moment of inertia of load (kg*m*m)		Point to point movement, can also provide angular displacement-time data: 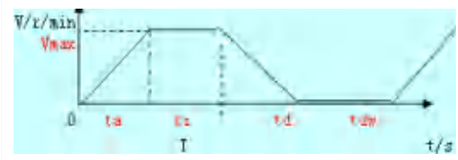 Angular displacement s= Run time ta+tr+td= Standing time tdw=
Load disk diameter(mm)		
Motor speed and maximum speed (m/s)		
Stroke (°)		
Run time (s)		
Standing time (s)		
Is there a speed-time sequence (See right V-T)	☐Yes ☐No	
Motion trajectory	☐point to point movement ☐Interpolation movement	
Whether is Vertical movement	☐Yes ☐No	
Is there many movers to move	☐Yes __PCS ☐No	
Whether have contact processing force	☐Yes __N ☐No	
Power/Encoder extension cord length (M)		
Driver and encoder related requirements (optional)		
Driver operating voltage	☐48Vdc ☐220Vdc ☐other	
Control method	☐pulse & direction ☐analog voltage ☐I/O trigger ☐Bus ___	
Positioning accuracy (arc sec)		
Repeat positioning accuracy (arc sec)		
Working environment	☐clear ☐dust ☐spray ☐dust ☐Metal particle dust	

The total height of Canton Tower is 600 meters, including the main tower and the antenna mast at a height of 450 meters and 150 meters respectively.

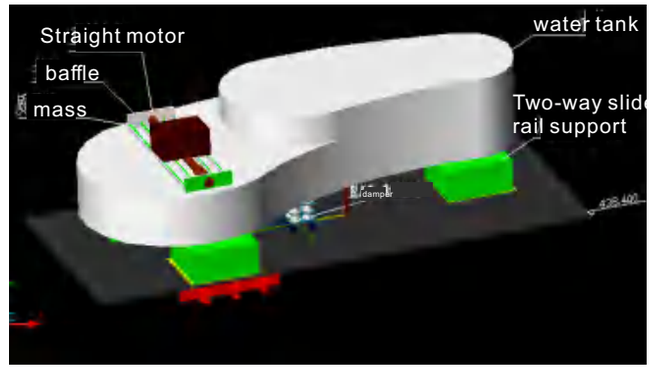

At the height of 438 meters in Canton Tower (also called small pretty waist) has two sets of linear motor system,which R&D,manufactured and installed by SHENZHEN HAN'S MOTOR S&T CO.,LTD. (each set is composed of 4 units 8000N linear motor parallel output) with loading capacity 50 tons. It will drive load quickly to the corresponding position in case of strong wind or earthquake to balance the focus of tower,and reach the effects against earthquake and strong wind.

HAN'S MOTOR is the pioneer that applied linear motor system (active tuning control) in the field of super high-rise building in China!

Shenzhen Han's Motor S&T Co ,Ltd

Address: 5-6F, Building 4, Han's Laser Production Base, No.128, Chongqing Rd., Fuyong Street, Baoan District, Shenzhen City, Guangdong Province,China

Phone: +86-755-26983668 Fax: +86-755-26982786

E-Mail: hansmotor@hanslaser.com Website: www.hansmotor.com